General Catalogue 2018

# H-Tec: High load hinge range

The SFS group has been in business for more than 50 years. During this time it has continually evolved, becoming even more adaptable to the demands of the markets. From 2013 the activities of the Group have been divided into three segments and each segment offers its services and products under four different brands.
The common goal is always the same: to create benefits for the customers.

In the **Engineered Components** segment, we act as a development and manufacturing partner for precision cold formed components, special fasteners and assemblies. Under the brand **SFS intec**, we mainly deal with the automotive industry and general industrial sectors. Under the brand **Unisteel** we serve customers in the electronics industry.

The **Fastening Systems** segment operates as an innovation and solutions provider for application-optimized fastening systems and hinges.

Under the brand **SFS intec,** we serve the construction industry and under the brand **GESIPA,** the automotive industry, trade and other general industrial application segments.

In **Distribution & Logistics** segment we are in our home market of Switzerland under the brand, **SFS unimarket**.
We stand out as a reliable supply and logistics partner for trade, and industry. The product range includes fasteners, tools, hardware and building supplies.

Over 8600 employees are ready to assist customers in more than 70 sites spread over 25 countries.

SFS intec S.r.l in Pordenone produces hinges for doors and windows for the SFS sites worldwide.

## Emergency exits

This pictogram characterizes the hinges which, according to Standard EN 1935:2002, are suitable for escape routes and emergency exit doors, in accordance with our durability tests.

## Fire resistance

This pictogram characterizes the hinges which, according to Standard EN 1935:2002, are suitable for firedoors, in accordance with our durability tests. To be considered also Standard EN 1935:2002, annex B, and EN 1935:2002/ AC:2003.

## Smoke resistance

This pictogram characterizes the hinges which, according to Standard EN 1935:2002, are suitable for smoke protection doors, in accordance with our durability tests. To be considered also Standard EN 1935:2002, annex B, and EN 1935:2002/ AC:2003.

## Burglar resistance

This pictogram characterizes the hinges which, according to Standard EN 1935:2002, are suitable for burglar resistance doors, in accordance with our durability tests. To be considered also Standard EN 1935:2002, annex C.

## Soundproofing

This pictogram characterizes the hinges which are suitable for soundproofing doors.

H-Tec and H-Tec 3D Programme of SFS

With this new catalogue, SFS wants to widen its product portfolio and present H-Tec and H-Tec 3D hinges for modern and heavy-duty doors.
H-Tec and H-Tec 3D are the ideal solution for High Load, High Performace, Heavy Duty, High Frequency, High Resistance and Heavy applications.
These heavy-duty hinges have a maximum load capacity of 400 kg and are ideal for use on fire protection and smoke resistant doors as well as for safe operation on escape and rescue routes..

H-Tec represent the easily solution for screwing on timber frames.

H-Tec 3D offer a three-dimensional adjustment.

## Product information

Chapter 1: H-Tec 3D adjustable hinges ..... 7-20
Chapter 2: H-Tec hinges ..... 23-30
Chapter 3: H-Tec 3D supports for H-Tec 3D hinges ..... 32-35

## Technical information

Product and product highlights ..... 36
Door hinges system installation and loading Capacity ..... 41
Certificates ..... 44
Assembly sheet for supports H-Tec 3D ..... 46

## Guide lines for chapter 1

| SFS code | Description | Frame | Door | H | Ø | kg | mm | page |
|---|---|---|---|---|---|---|---|---|
| 1585465 | H-Tec 3D 120 | Timber & Steel | flush-fit | 120 | 20 | 120 | 3 | 7 |
| 1585491 | H-Tec 3D 200 | Timber & Steel | flush-fit | 160 | 20 | 200 | 3 | 8 |
| 1588254 | H-Tec 3D 300 | Timber & Steel | flush-fit | 160 | 22 | 300 | 4 | 9 |
| 1585496 | H-Tec 3D 400 | Timber & Steel | flush-fit | 160 | 22 | 400 | 4 | 10 |
| 1585474 | H-Tec 3D 120 | Timber & Steel | rebated | 120 | 20 | 120 | 3 | 11 |
| 1585494 | H-Tec 3D 200 | Timber & Steel | rebated | 160 | 20 | 200 | 3 | 12 |
| 1585495 | H-Tec 3D 300 | Timber & Steel | rebated | 160 | 22 | 300 | 4 | 13 |
| 1585500 | H-Tec 3D 400 | Timber & Steel | rebated | 160 | 22 | 400 | 4 | 14 |
| 1585464 | H-Tec 3D 120 | Timber & Steel | rebated flush-fit | 120 | 20 | 120 | 3 | 15 |
| 1585480 | H-Tec 3D 200 | Timber & Steel | rebated flush-fit | 160 | 20 | 200 | 3 | 16 |
| 1585473 | H-Tec 3D 120 | Timber & Steel | rebated with gasket | 120 | 20 | 120 | 3 | 17 |
| 1585493 | H-Tec 3D 200 | Timber & Steel | rebated with gasket | 160 | 20 | 200 | 3 | 18 |
| 1590536 | H-Tec 3D 300 | Timber & Steel | rebated with gasket | 160 | 22 | 300 | 4 | 19 |
| 1590537 | H-Tec 3D 400 | Timber & Steel | rebated with gasket | 160 | 22 | 400 | 4 | 20 |

**H-Tec 3D 120**
Hinge for flush-fit application on
timber and steel frame
order code **1585465**

**Product description**
Flush fit application
Fixed internal pin
Two security screws
With self lubricating bushes
Certification CE
Usable as DIN left or right element

**Technical details**

| | |
|---|---|
| Height: | 120 mm |
| Barrel diameter: | Ø20 mm |
| Material thickness: | 3 mm |
| Pin diameter: | Ø10 mm |
| Screws hole: | 5,0 x 50,0 mm |
| Load capacity*): | 120 kg with two hinges and door panel 2x1 m |
| Application field: | Fire resistance, smoke resistance |
| Finish | Brushed Stainless Steel |

Designation in accordance to standards EN 1935:2002

| | | | | | | | |
|---|---|---|---|---|---|---|---|
| 4 | 7 | 6 | 1 | 1 | 4 | 1 | 13 |

CE

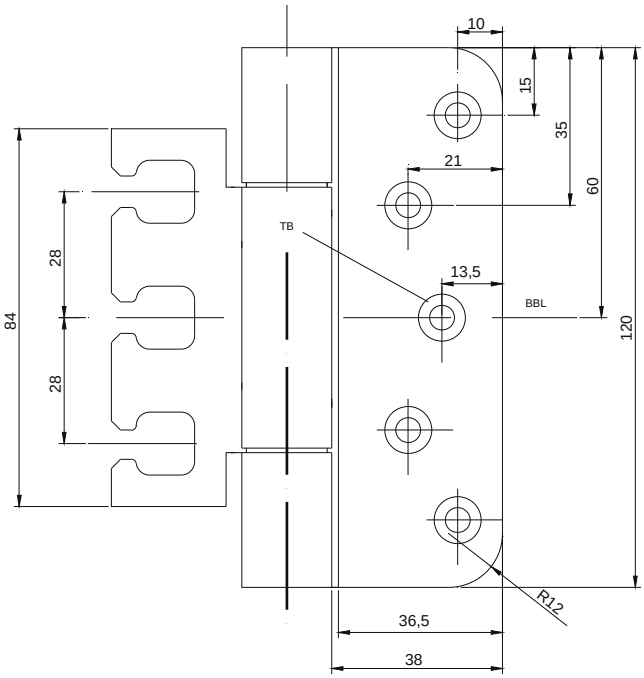


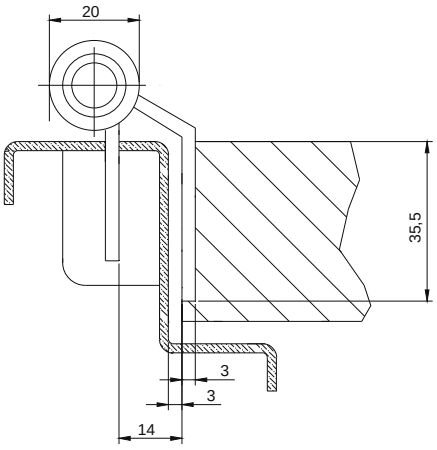

**H-Tec 3D 200**
Hinge for flush-fit application on timber, and steel frame
order code **1585491**

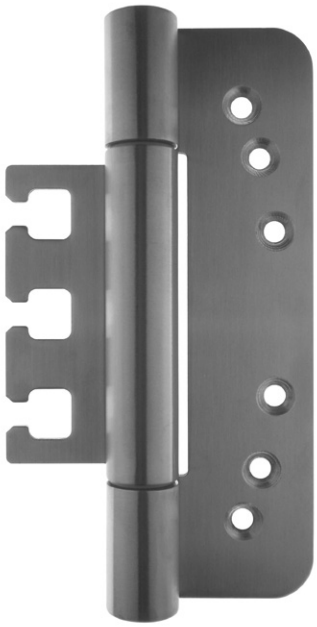

**Product description**
Flush fit application
Fixed internal pin
Integrated security screw
Self lubricating bushes
CE Certification
Usable as DIN left or right element

**Technical details**

| | |
|---|---|
| Height: | 160 mm |
| Barrel diameter: | Ø20 mm |
| Material thickness: | 3 mm |
| Pin diameter: | Ø10 mm |
| Screws hole: | 5,0 x 50,0 mm |
| Load capacity*): | 200 kg with two hinges and with a door panel 2x1m |
| Application field: | Fire resistance, smoke resistance |
| Finish | Brushed Stainless Steel |

Designation in accordance to standards EN 1935:2002

| | | | | | | | |
|---|---|---|---|---|---|---|---|
| 4 | 7 | 7 | 1 | 1 | 4 | 1 | 14 |

CE

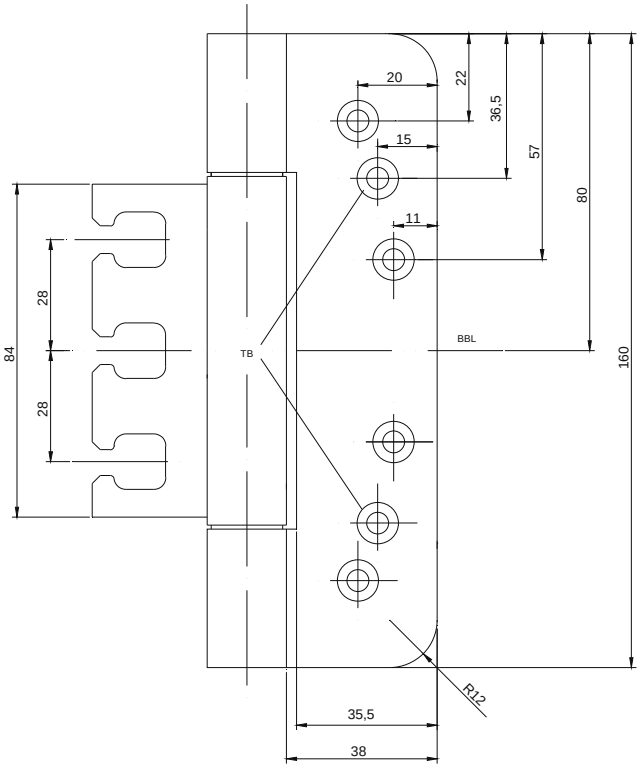


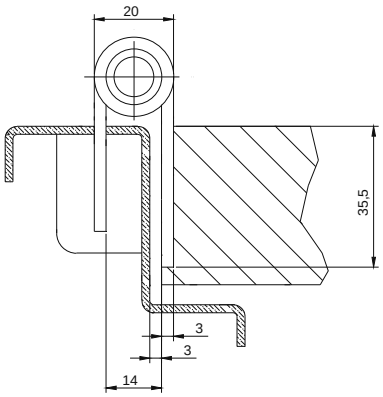

**H-Tec 3D 300**
Hinge for heavy flush-fit application on timber and steel frame
order code **1588254**

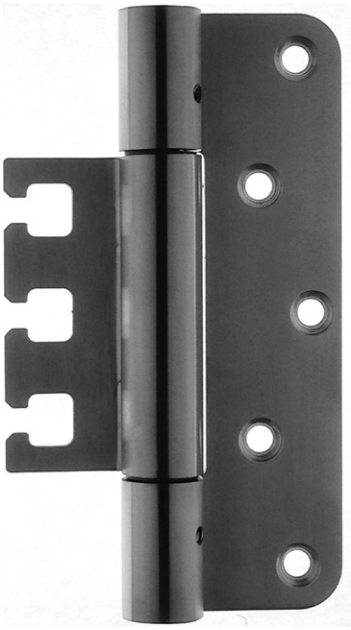

**Product description**
Flush fit application
Fixed internal pin
Integrated security screw
Self lubricating bushes
CE Certification
Usable as DIN left or right element

**Technical details**

| | |
|---|---|
| Height: | 160 mm |
| Barrel diameter: | Ø22 mm |
| Material thickness: | 4 mm |
| Pin diameter: | Ø10 mm |
| Screws hole: | 6,0 x 50,0 mm |
| Load capacity*): | 300 kg with two hinges and with a door panel 2x1m |
| Application field: | Fire resistance, smoke resistance |
| Finish | Brushed Stainless Steel |

Designation in accordance to standards EN 1935:2002

| | | | | | | | |
|---|---|---|---|---|---|---|---|
| 4 | 7 | 7 | 1 | 1 | 4 | 1 | 14 |

CE

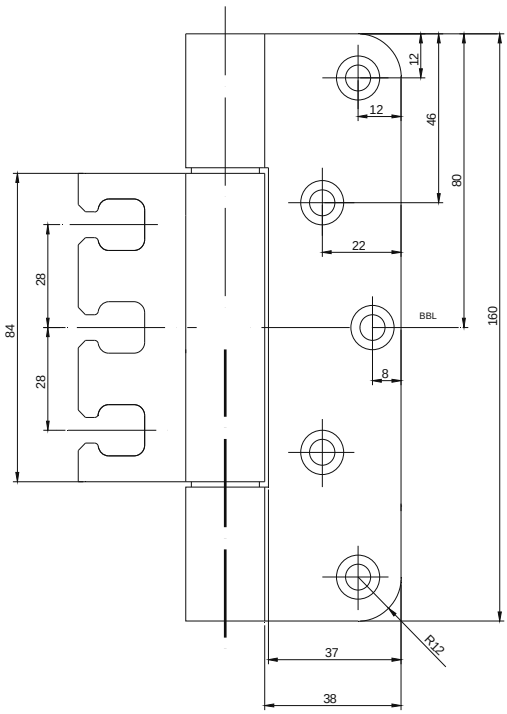


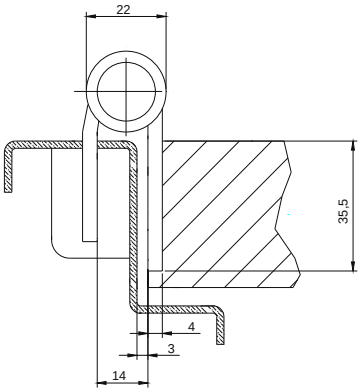

**H-Tec 3D 400**
Hinge for very heavy flush-fit application
on timber and steel frame
order code **1585496**

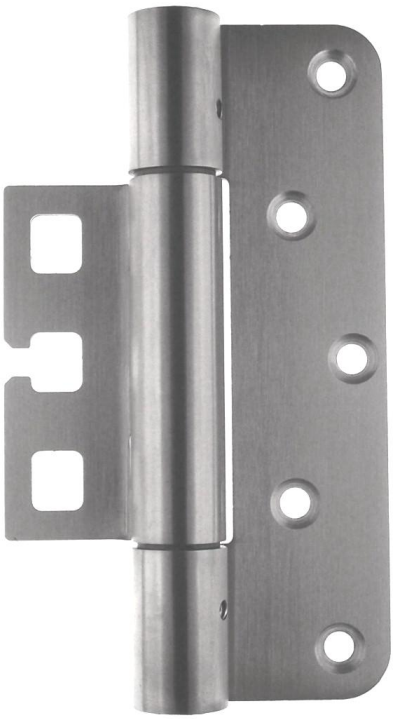

**Product description**
Flush fit application
Robust Construction
Concealed self lubricating bushes for extreme loads
Specific hinges for extreme loads
Frame barrel plate with anti-effractionclosed slots
Sash and frame part with welded side barrel and security screws
Threaded pin with security screws
Two security screws
Certification CE
Usable as DIN left or right element

**Technical details**

| | |
|---|---|
| Height: | 160 mm |
| Barrel diameter: | Ø22 mm |
| Material thickness: | 4 mm |
| Pin diameter: | Ø10 mm |
| Screws hole: | 6,0 x 50,0 mm |
| Load capacity*): | 400 kg with two hinges and door panel 2x1 m |
| Application field: | Fire resistance, smoke resistance, anti-effraction |
| Finish | Brushed Stainless Steel |

Designation in accordance to standards EN 1935:2002

| | | | | | | | |
|---|---|---|---|---|---|---|---|
| 4 | 7 | 7 | 1 | 1 | 4 | 1 | 14 |

CE
Stainless Steel

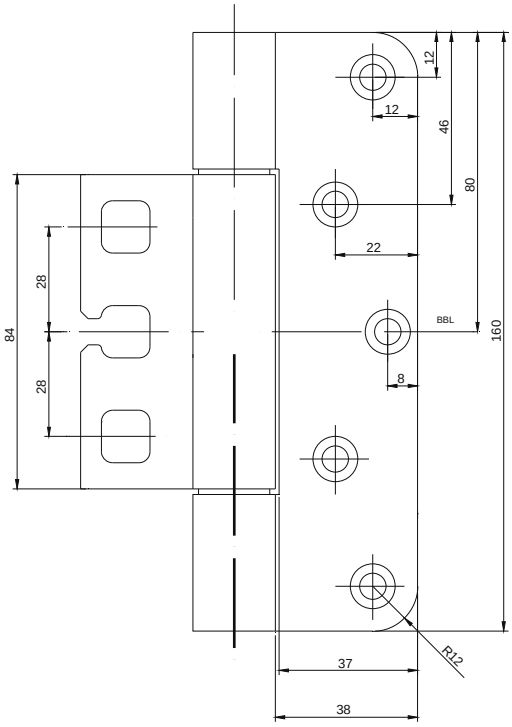


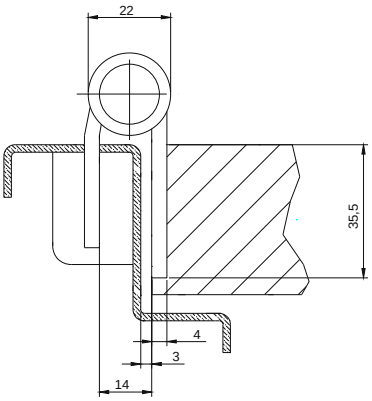

**H-Tec 3D 120**
Hinge for rebated application on
timber and steel frame
order code **1585474**

**Product description**
Rebated application
Fixed internal pin
Two security screws
With self lubricating bushes
Certification CE
Usable as DIN left or right element

**Technical details**

| | |
|---|---|
| Height: | 120 mm |
| Barrel diameter: | Ø20 mm |
| Material thickness: | 3 mm |
| Pin diameter: | Ø10 mm |
| Screws hole: | 5,0 x 50,0 mm |
| Load capacity*): | 120 kg with two hinges and door panel 2x1 m |
| Application field: | Fire resistance, smoke resistance |
| Finish | Brushed Stainless Steel |

Designation in accordance to standards EN 1935:2002

| | | | | | | | |
|---|---|---|---|---|---|---|---|
| 4 | 7 | 6 | 1 | 1 | 4 | 1 | 13 |

CE

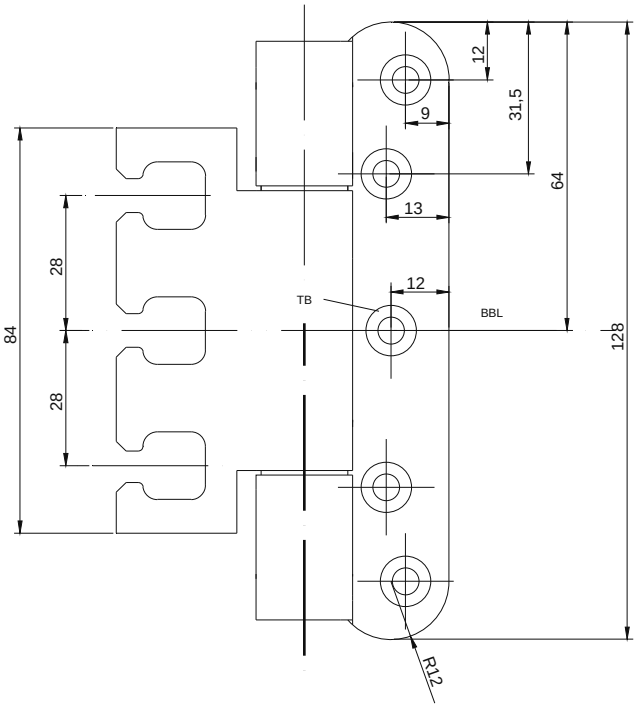


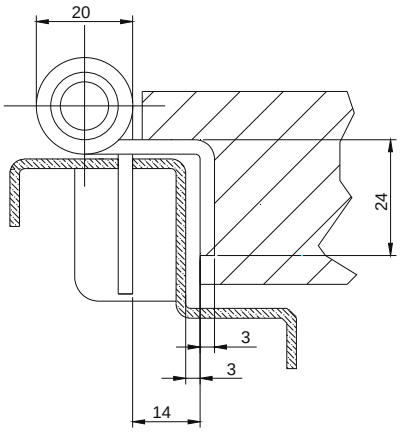

**H-Tec 3D 200**
Hinge for rebated application on
timber and steel frame
order code **1585494**

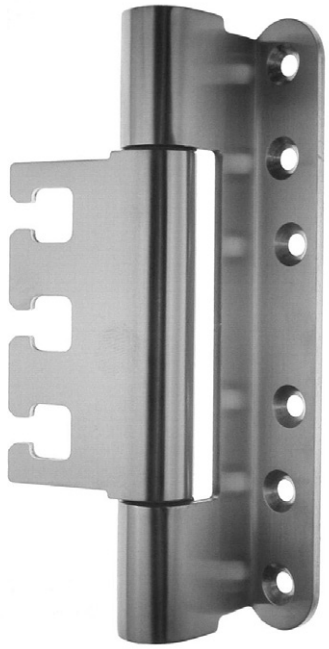

**Product description**
Rebated application
Fixed internal pin
Two security screws
With self lubricating bushes
Certification CE
Usable as DIN left or right element

**Technical details**

| | |
|---|---|
| Height: | 160 mm |
| Barrel diameter: | Ø20 mm |
| Material thickness: | 3 mm |
| Pin diameter: | Ø10 mm |
| Screws hole: | 5,0 x 50,0 mm |
| Load capacity*): | 200 kg with two hinges and door panel 2x1 m |
| Application field: | Fire resistance, smoke resistance |
| Finish | Brushed Stainless Steel |

Designation in accordance to standards EN 1935:2002

| | | | | | | | |
|---|---|---|---|---|---|---|---|
| 4 | 7 | 7 | 1 | 1 | 4 | 1 | 14 |

CE

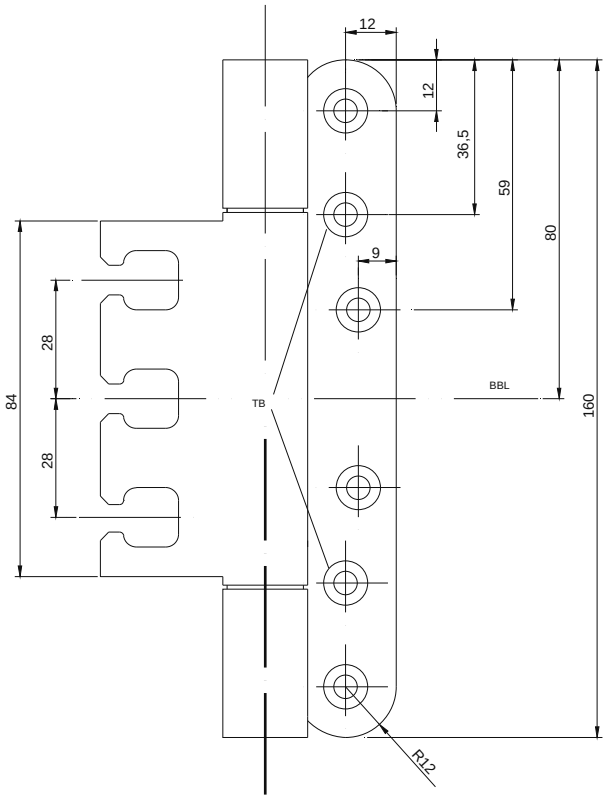


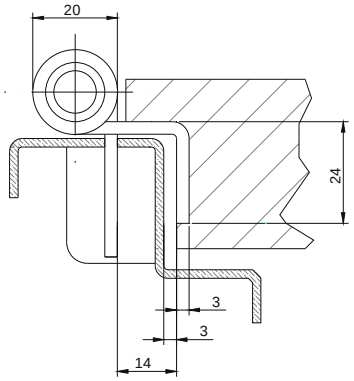

## H-Tec 3D 300

Hinge for rebated application on
timber and steel frame
order code **1585495**

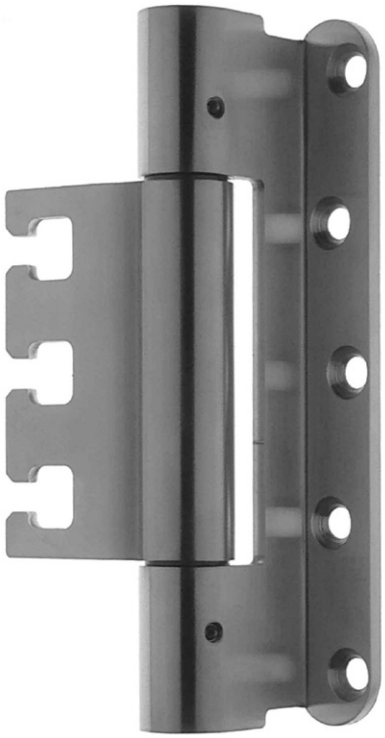

**Product description**

Rebated application
Robust construction
Concealed self lubricating bushes for extreme loads
Specific hinges for extreme loads
Frame part with additional welding on side barrel
Anti-loosening threaded pin
Two security screws
Certification CE
Usable as DIN left or right element

**Technical details**

| | |
|---|---|
| Height: | 160 mm |
| Barrel diameter: | Ø22 mm |
| Material thickness: | 4 mm |
| Pin diameter: | Ø10 mm |
| Screws hole: | 6,0 x 50,0 mm |
| Load capacity*): | 300 kg with two hinges and door panel 2x1 m |
| Application field: | Fire resistance, smoke resistance |

Designation in accordance to standards EN 1935:2002

| | | | | | | | |
|---|---|---|---|---|---|---|---|
| 4 | 7 | 7 | 1 | 1 | 4 | 1 | 14 |

CE

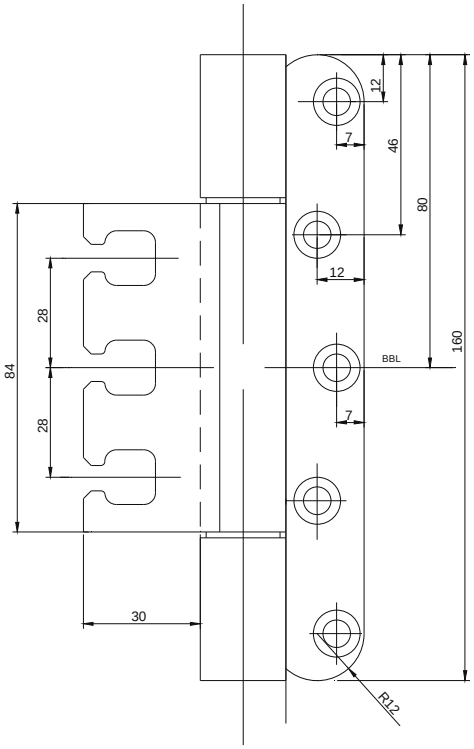


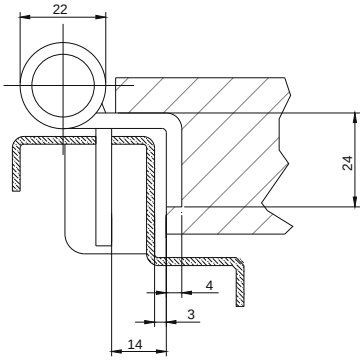

**H-Tec 3D 400**
Hinge for rebated application on
timber and steel frame
order code **1585500**

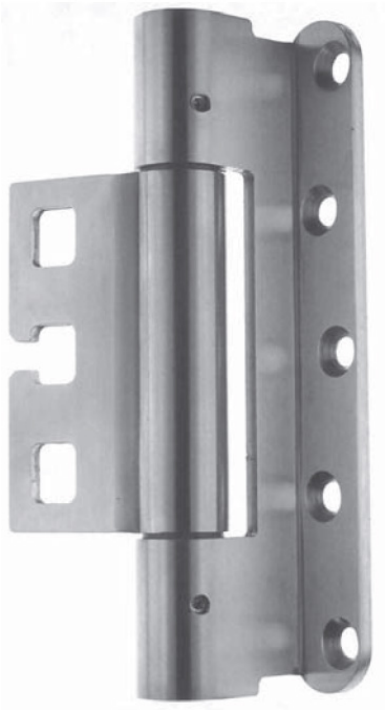

**Product description**
Rebated application
Robust construction
Concealed self lubricating bushes for extreme loads
Specific hinges for extreme loads
Frame barrel plate with anti-effraction closed slots
Sash and frame part with additional welding on side barrel
Anti-loosening threaded pin
Two security screws
Certification CE
Usable as DIN left or right element

**Technical details**

| | |
|---|---|
| Height: | 160 mm |
| Barrel diameter: | Ø22 mm |
| Material thickness: | 4 mm |
| Pin diameter: | Ø10 mm |
| Screws hole: | 6,0 x 50,0 mm |
| Load capacity*): | 400 kg with two hinges and door panel 2x1 m |
| Application field: | Fire resistance, smoke resistance la fumée, conception anti-effraction |
| Finish | Brushed Stainless Steel |

Designation in accordance to standards EN 1935:2002

| | | | | | | | |
|---|---|---|---|---|---|---|---|
| 4 | 7 | 7 | 1 | 1 | 4 | 1 | 14 |

CE

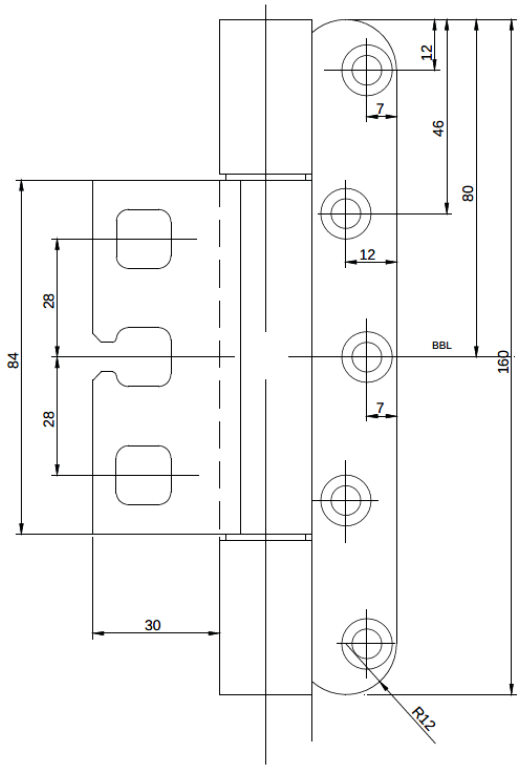


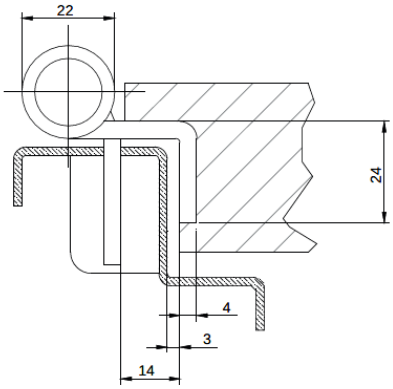

**H-Tec 3D 120**
Hinge for rebated flush-fit application
on timber and steel frame
order code **1585464**

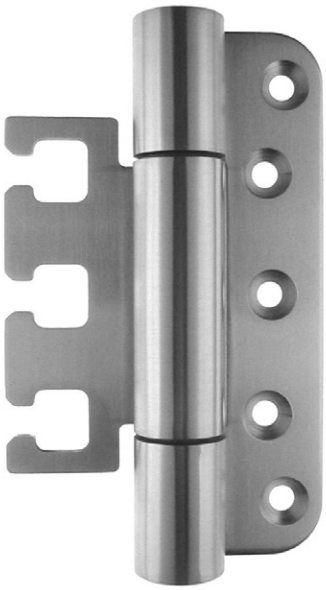

**Product description**
Flush fit application
Fixed internal pin
Two security screws
With self lubricating bushes
Certification CE
Usable as DIN left or right element

**Technical details**

| | |
|---|---|
| Height: | 120 mm |
| Barrel diameter: | Ø20 mm |
| Material thickness: | 3 mm |
| Pin diameter: | Ø10 mm |
| Screws hole: | 5,0 x 50,0 mm |
| Load capacity*): | 120 kg with two hinges and door panel 2x1 m |
| Application field: | Fire resistance, smoke resistance |
| Finish | Brushed Stainless Steel |

Designation in accordance to standards EN 1935:2002

| | | | | | | | |
|---|---|---|---|---|---|---|---|
| 4 | 7 | 6 | 1 | 1 | 4 | 1 | 13 |

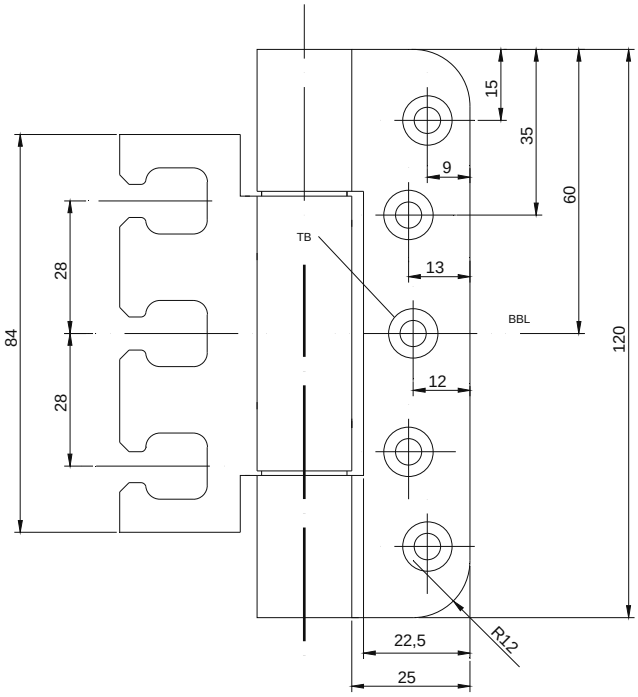


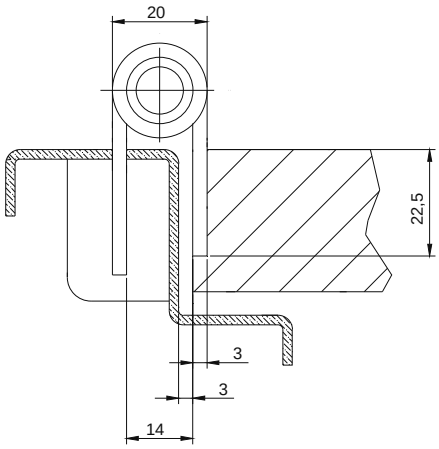

**H-Tec 3D 200**
Hinge for rebated flush-fit application
on timber and steel frame
order code **1585480**

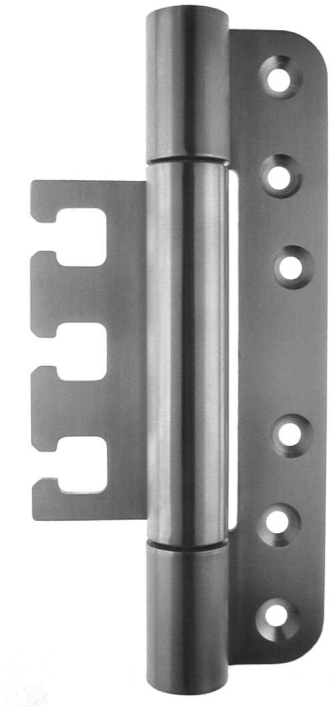

**Product description**
Flush fit application
Fixed internal pin
Integrated security screw
With self lubricating bushes
Certification CE
Usable as DIN left or right element

**Technical details**

| | |
|---|---|
| Height: | 160 mm |
| Barrel diameter: | Ø20 mm |
| Material thickness: | 3 mm |
| Pin diameter: | Ø10 mm |
| Screws hole: | 5,0 x 50,0 mm |
| Load capacity*): | 200 kg with two hinges and door panel 2x1 m |
| Application field: | Fire resistance, smoke resistance |
| Finish | Brushed Stainless Steel |

Designation in accordance to standards EN 1935:2002

| | | | | | | | |
|---|---|---|---|---|---|---|---|
| 4 | 7 | 7 | 1 | 1 | 4 | 1 | 14 |

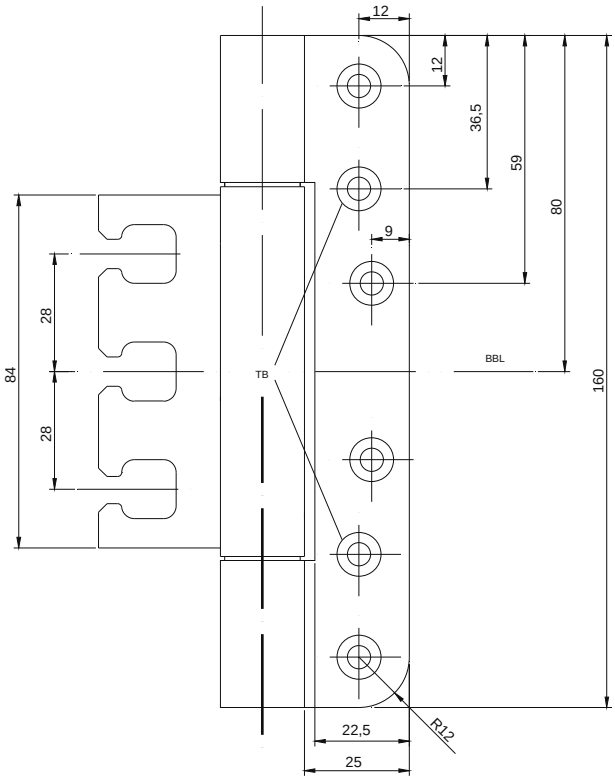


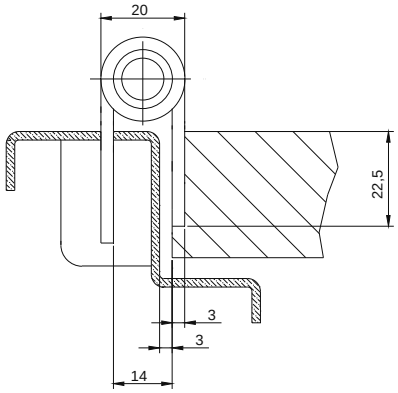

**H-Tec 3D 120**
Hinge for rebated application with gasket
on timber and steel frame
order code **1585473**

**Product description**
Rebated application with gasket (FD)
Fixed internal pin
Two security screws
With self lubricating bushes
Certification CE
Usable as DIN left or right element

**Technical details**

| | |
|---|---|
| Height: | 120 mm |
| Barrel diameter: | Ø20 mm |
| Material thickness: | 3 mm |
| Pin diameter: | Ø10 mm |
| Screws hole: | 5,0 x 50,0 mm |
| Load capacity*): | 120 kg with two hinges and door panel 2x1 m |
| Application field: | Fire resistance, smoke resistance, soundproofing |
| Finish | Brushed Stainless Steel |

Designation in accordance to standards EN 1935:2002

| | | | | | | | |
|---|---|---|---|---|---|---|---|
| 4 | 7 | 6 | 1 | 1 | 4 | 1 | 13 |

CE

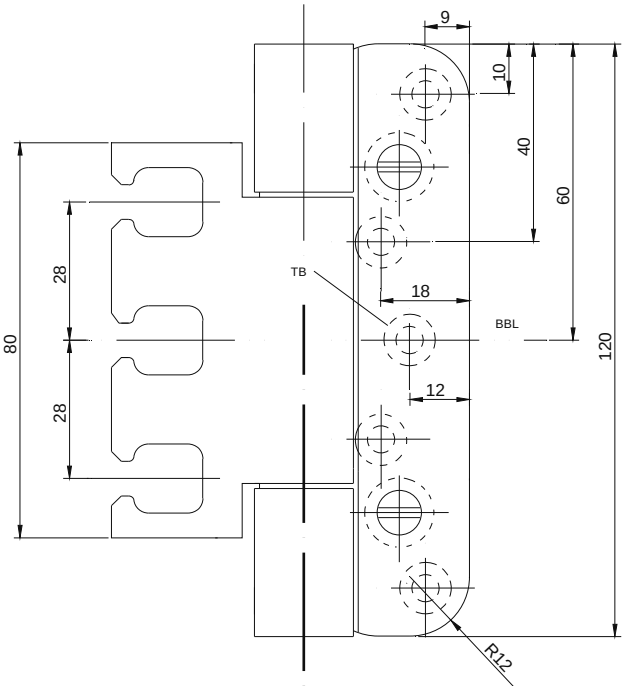


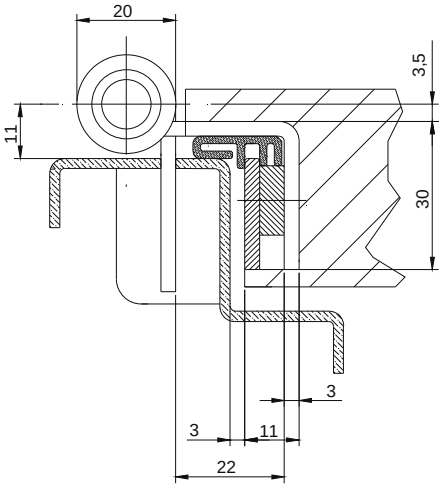

## H-Tec 3D 200

Hinge for rebated application with gasket
on timber and steel frame
order code **1585493**

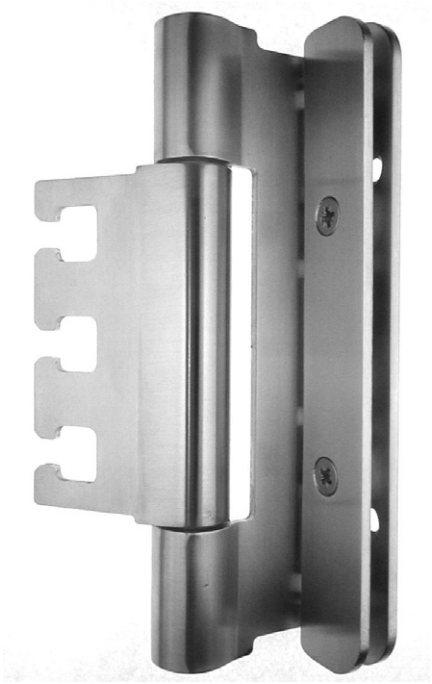

**Product description**

Rebated application
Fixed internal pin
Two security screws
With self lubricating bushes
Certification CE
Usable as DIN left or right element

**Technical details**

| | |
|---|---|
| Height: | 160 mm |
| Barrel diameter: | Ø20 mm |
| Material thickness: | 3 mm |
| Pin diameter: | Ø10 mm |
| Screws hole: | 5,0 x 50,0 mm |
| Load capacity*): | 200 kg with two hinges and door panel 2x1 m |
| Application field: | Fire resistance, smoke resistance, soundproofing |
| Finish | Brushed Stainless Steel |

Designation in accordance to standards EN 1935:2002

| | | | | | | | |
|---|---|---|---|---|---|---|---|
| 4 | 7 | 7 | 1 | 1 | 4 | 1 | 14 |

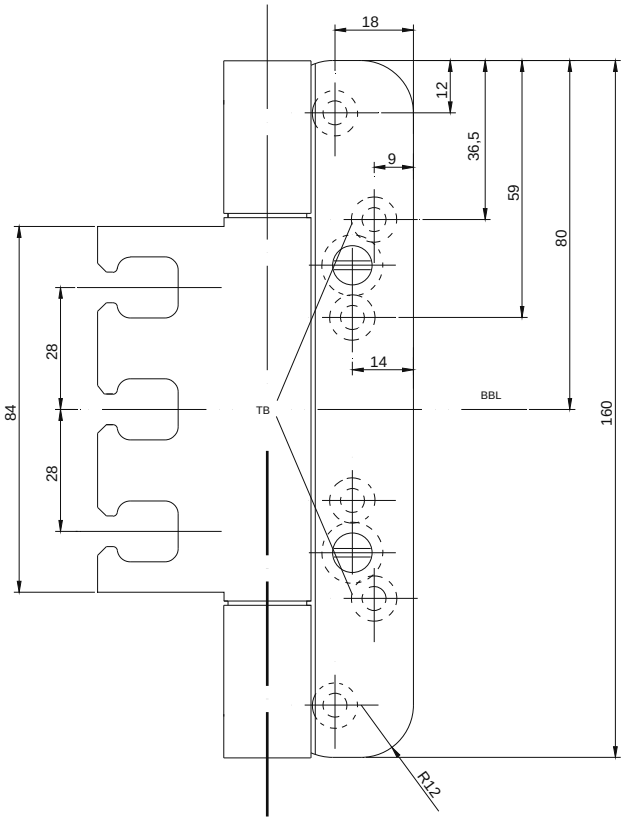


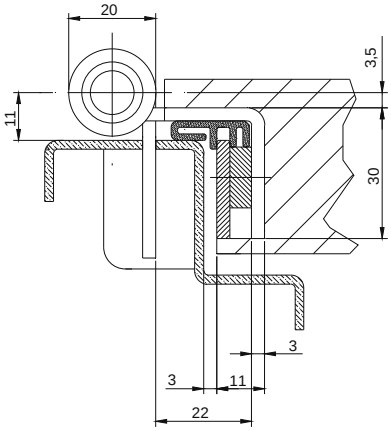

**H-Tec 3D 300**
Hinge for rebated application with gasket
on timber and steel frame
order code **1590536**

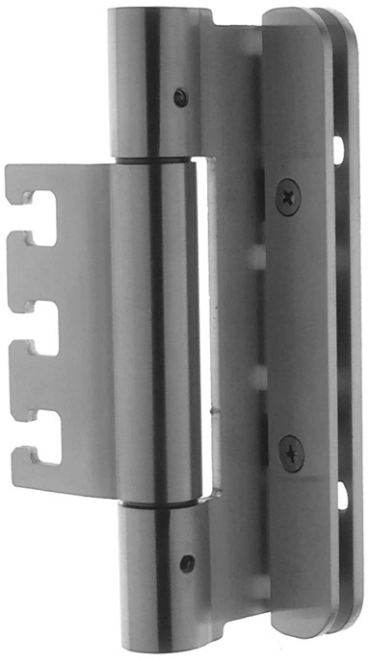

**Product description**
Rebated application pour joint de vantail (FD)
Robust construction
Concealed self lubricating bushes for extreme loads
Specific hinges for extreme loads
Frame part with additional welding on side barrel
Anti-loosening threaded pin
Two security screws
Certification CE
Usable as DIN left or right element

**Technical details**

| | |
|---|---|
| Height: | 160 mm |
| Barrel diameter: | Ø22 mm |
| Material thickness: | 4 mm |
| Pin diameter: | Ø10 mm |
| Screws hole: | 6,0 x 50,0 mm |
| Load capacity*): | 300 kg with two hinges and door panel 2x1 m |
| Application field: | Fire resistance, smoke risistance, soundproofing |
| Finish | Brushed Stainless Steel |

Designation in accordance to standards EN 1935:2002

| | | | | | | | |
|---|---|---|---|---|---|---|---|
| 4 | 7 | 7 | 1 | 1 | 4 | 1 | 14 |

CE

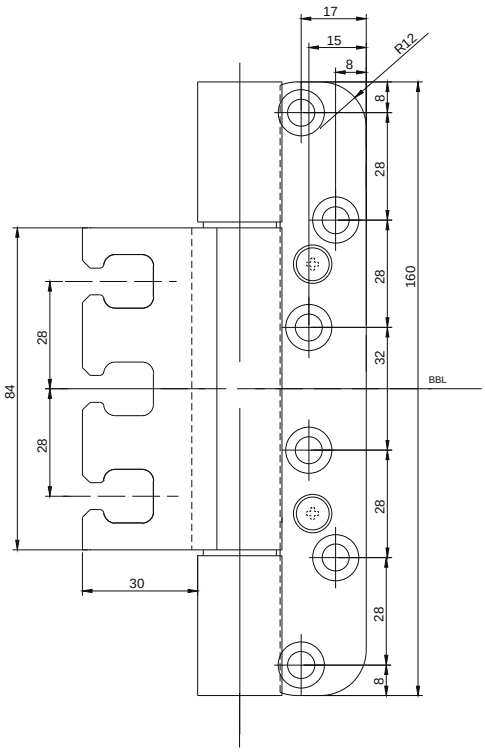


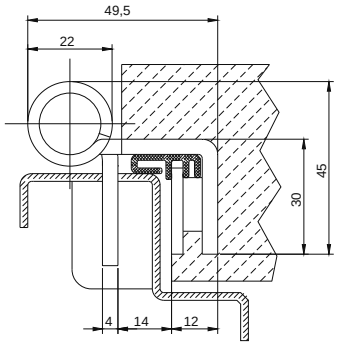

**H-Tec 3D 400**
Hinge for flush-fit application on
timber and steel frame
order code **1590537**

**Product description**
Rebated application with gasket
Robust construction
Concealed self lubricating bushes for extreme loads
Specific hinges for extreme loads
Frame barrel plate with anti-effraction closed slots
Sash and frame part with additional welding on side barrel
Anti-loosening threaded pin
Two security screws
Certification CE
Usable as DIN left or right element

**Technical details**

| | |
|---|---|
| Height: | 160 mm |
| Barrel diameter: | Ø22 mm |
| Material thickness: | 4 mm |
| Pin diameter: | Ø10 mm |
| Screws hole: | 6,0 x 50,0 mm |
| Load capacity*): | 400 kg with two hinges and door panel 2x1 m |
| Application field: | Fire resistance, smoke resistance, soundproofing, conception anti-effraction |
| Finish | Brushed Stainless Steel |

Designation in accordance to standards EN 1935:2002

| | | | | | | | |
|---|---|---|---|---|---|---|---|
| 4 | 7 | 7 | 1 | 1 | 4 | 1 | 14 |

CE

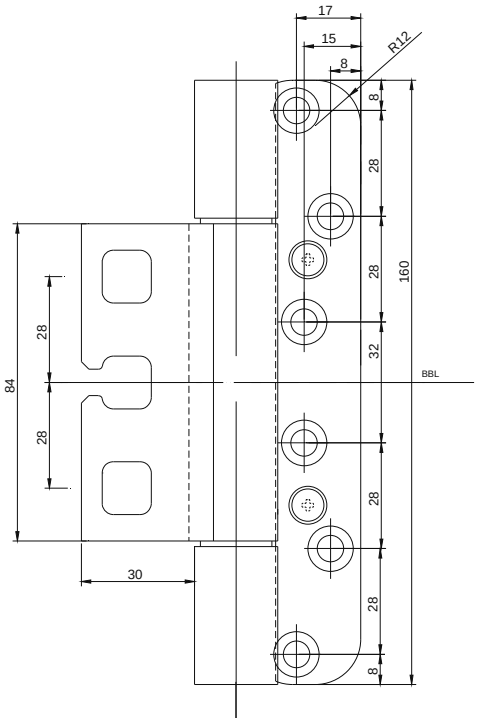


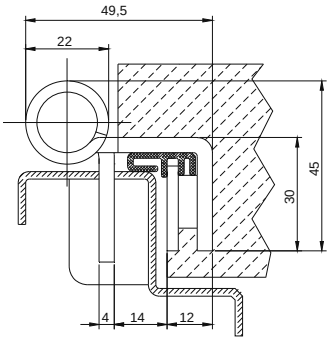

## Guide lines for chapter 2

| SFS code | Description | Frame | Door | H | Ø | kg | mm | page |
|---|---|---|---|---|---|---|---|---|
| 1585450 | H-Tec 120 | Timber | flush-fit | 120 | 20 | 120 | 3 | 23 |
| 1585463 | H-Tec 160 | Timber | flush-fit | 160 | 20 | 160 | 3 | 24 |
| 1590539 | H-Tec 160 | Timber | rebated | 160 | 20 | 160 | 3 | 25 |
| 1585461 | H-Tec 120 | Timber | rebated with gasket | 120 | 20 | 120 | 3 | 26 |
| 1590538 | H-Tec 160 | Timber | rebated with gasket | 160 | 20 | 160 | 3 | 27 |
| 1585127 | H-Tec 100 | Timber | rebated flush-fit | 100 | 20 | 100 | 3 | 28 |
| 1585449 | H-Tec 120 | Timber | rebated flush-fit | 120 | 20 | 120 | 3 | 29 |
| 1585462 | H-Tec 160 | Timber | rebated flush-fit | 160 | 20 | 160 | 3 | 30 |

**H-Tec 120**
Hinge for flush-fit application on timber frame
order code **1585450**

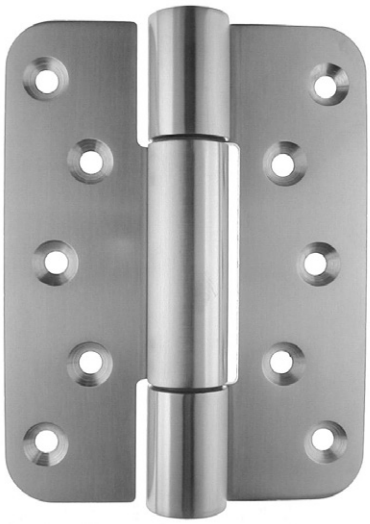

**Product description**
Flush fit application
To be screwn on timber frame
Anti-loosening threaded pin
With self lubricating bushes
Certification CE
Usable as DIN left or right element
On request available with security pin

**Technical details**

| | |
|---|---|
| Height: | 120 mm |
| Barrel diameter: | Ø20 mm |
| Material thickness: | 3 mm |
| Pin diameter: | Ø10 mm |
| Screws hole: | 5,0 x 50,0 mm |
| Load capacity*): | 120 kg with two hinges and door panel 2x1 m |
| Application field: | Fire resistance, smoke resistance |
| Finish | Brushed Stainless Steel |

Designation in accordance to standards EN 1935:2002

| | | | | | | | |
|---|---|---|---|---|---|---|---|
| 4 | 7 | 6 | 1 | 1 | 4 | **) | 13 |

CE

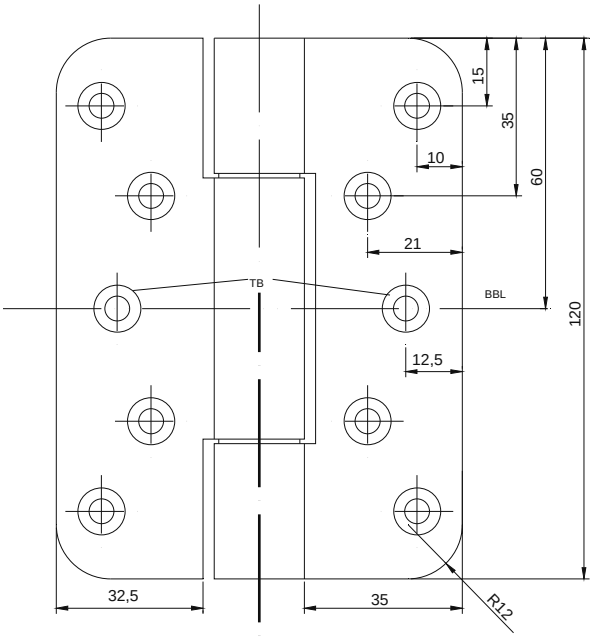


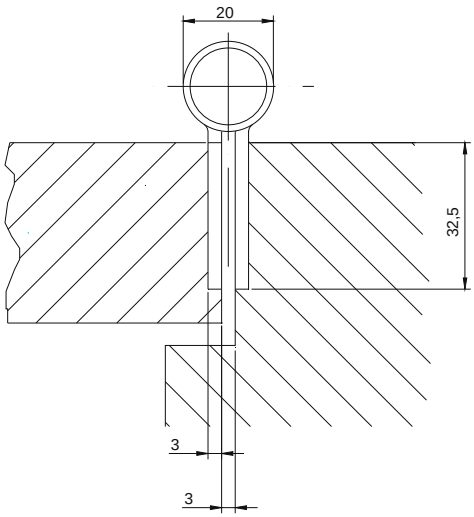

**H-Tec 160**
Hinge for flush-fit application on timber frame
order code **1585463**

**Product description**
Flush fit application
To be screwn on timber frame
Anti-loosening threaded pin
With self lubricating bushes
Certification CE
Usable as DIN left or right element
On request available with security pin

**Technical details**

| | |
|---|---|
| Height: | 160 mm |
| Barrel diameter: | Ø20 mm |
| Material thickness: | 3 mm |
| Pin diameter: | Ø10 mm |
| Screws hole: | 5,0 x 50,0 mm |
| Load capacity*): | 160 kg with two hinges and door panel 2x1 m |
| Application field: | Fire resistance, smoke resistance |
| Finish | Brushed Stainless Steel |

Designation in accordance to standards EN 1935:2002

| | | | | | | | |
|---|---|---|---|---|---|---|---|
| 4 | 7 | 7 | 1 | 1 | 4 | **) | 14 |

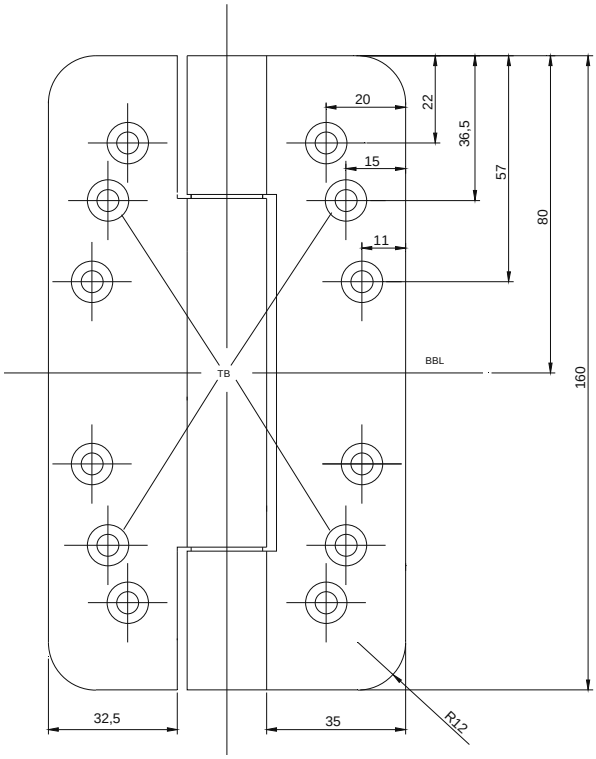


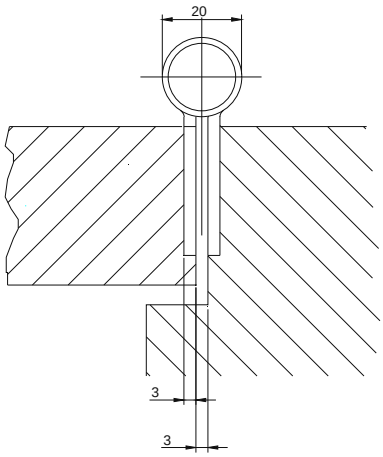

**H-Tec 160**
Hinge for rebated application on timber frame
order code **1590539**

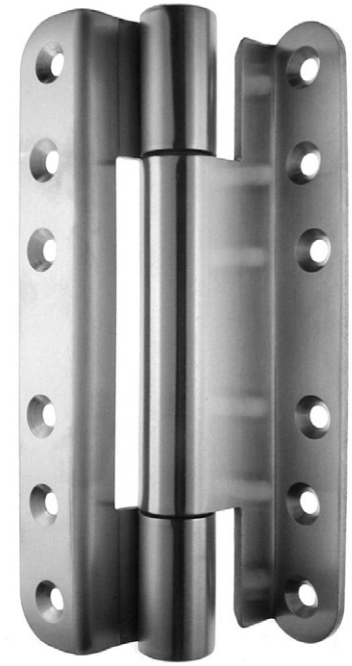

**Product description**
Rebated application
To be screwn on timber frame
Anti-loosening threaded pin
With self lubricating bushes
Certification CE
Usable as DIN left or right element
On request available with security pin

**Technical details**

| | |
|---|---|
| Height: | 160 mm |
| Barrel diameter: | Ø20 mm |
| Material thickness: | 3 mm |
| Pin diameter: | Ø10 mm |
| Screws hole: | 5,0 x 50,0 mm |
| Load capacity*): | 160 kg with two hinges and door panel 2x1 m |
| Application field: | Fire resistance, smoke resistance |
| Finish | Brushed Stainless Steel |

Designation in accordance to standards EN 1935:2002

| | | | | | | | |
|---|---|---|---|---|---|---|---|
| 4 | 7 | 7 | 1 | 1 | 4 | **) | 14 |

CE

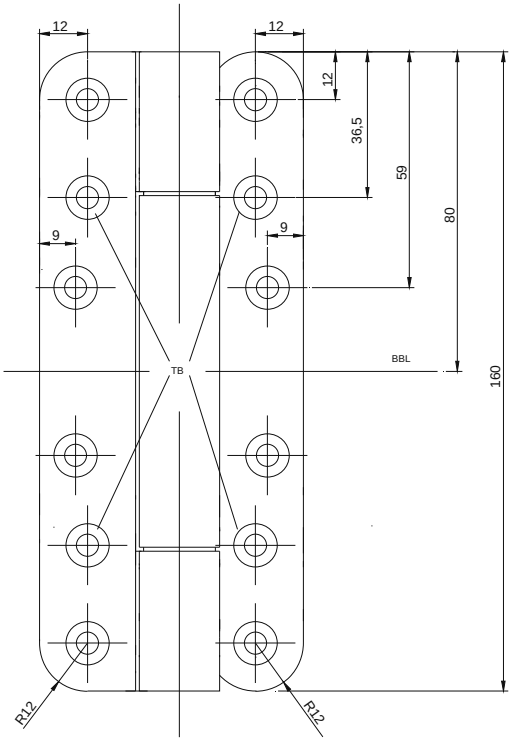


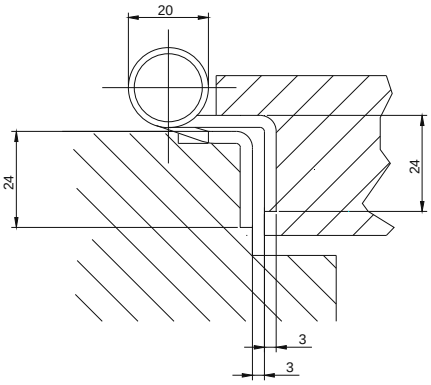

**H-Tec 120**
Hinge for rebated application with gasket on timber frame
order code **1585461**

**Product description**
Rebated application with gasket)
To be screwn on timber frame
Anti-loosening threaded pin
With self lubricating bushes
Certification CE
Usable as DIN left or right element
On request available with security pin

**Technical details**

| | |
|---|---|
| Height: | 120 mm |
| Barrel diameter: | Ø20 mm |
| Material thickness: | 3 mm |
| Pin diameter: | Ø10 mm |
| Screws hole: | 5,0 x 50,0 mm |
| Load capacity*): | 120 kg with two hinges and door panel 2x1 m |
| Application field: | Fire resistance, smoke resistance, soundproofing |
| Finish | Brushed Stainless Steel |

Designation in accordance to standards EN 1935:2002

| | | | | | | | |
|---|---|---|---|---|---|---|---|
| 4 | 7 | 6 | 1 | 1 | 4 | **) | 13 |

CE

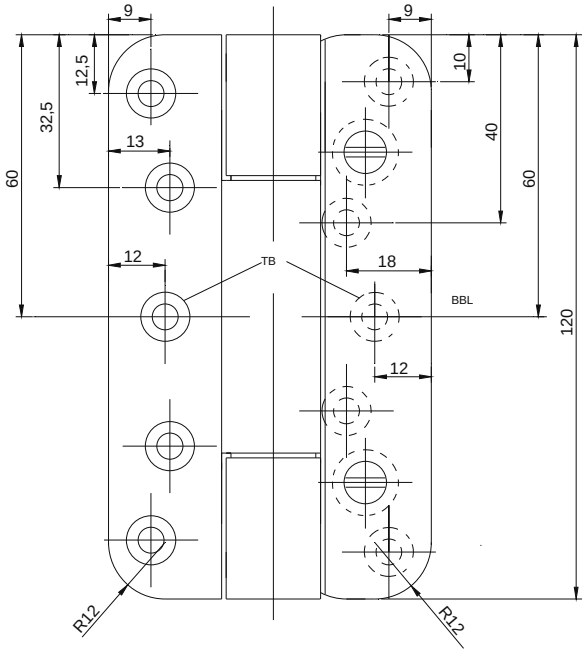


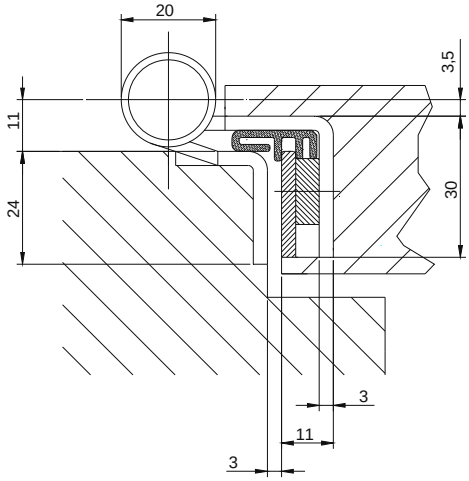

**H-Tec 100**
Hinge for rebated flush-fit application
on timber frame
order code **1585127**

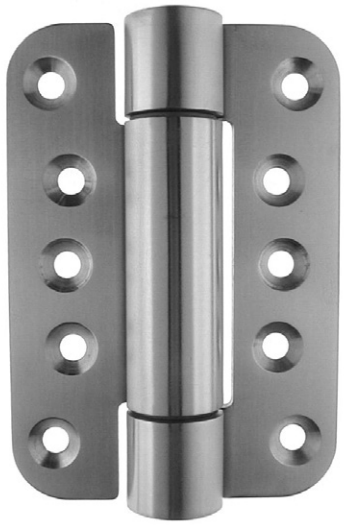

**Product description**
Flush fit application
To be screwn on timber frame
Anti-loosening threaded pin
With self lubricating bushes
Certification CE
Usable as DIN left or right element
On request available with security pin

**Technical details**

| | |
|---|---|
| Height: | 100 mm |
| Barrel diameter: | Ø20 mm |
| Material thickness: | 3 mm |
| Pin diameter: | Ø10 mm |
| Screws hole: | 5,0 x 50,0 mm |
| Load capacity*): | 100 kg with two hinges and door panel 2x1 m |
| Application field: | Fire resistance, smoke resistance |
| Finish | Brushed Stainless Steel |

Designation in accordance to standards EN 1935:2002

| | | | | | | | |
|---|---|---|---|---|---|---|---|
| 4 | 7 | 5 | 1 | 1 | 4 | **) | 12 |

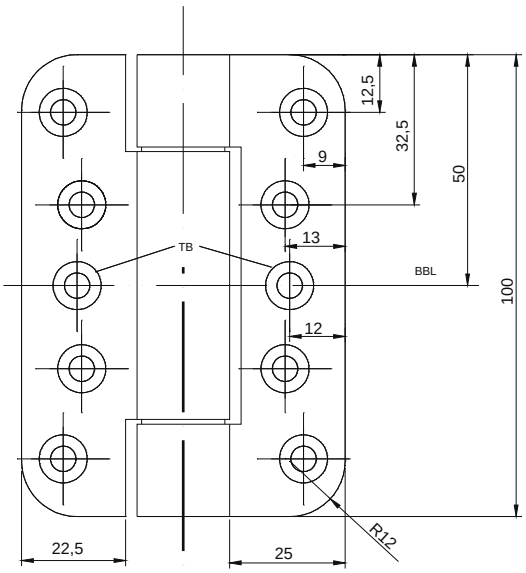


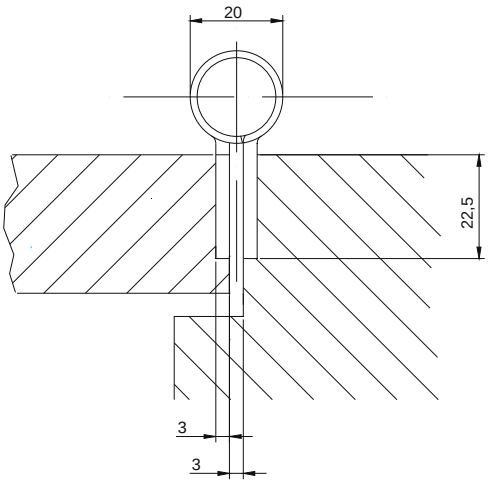

**H-Tec Tec 160**
Hinge for rebated application with gasket on timber frame
order code **1590538**

**Product description**
Rebated application with gasket (FD)
To be screwn on timber frame
Anti-loosening threaded pin
With self lubricating bushes
Certification CE
Usable as DIN left or right element
On request available with security pin

**Technical details**

| | |
|---|---|
| Height: | 160 mm |
| Barrel diameter: | Ø20 mm |
| Material thickness: | 3 mm |
| Pin diameter: | Ø10 mm |
| Screws hole: | 5,0 x 50,0 mm |
| Load capacity*): | 160 kg with two hinges and door panel 2x1 m |
| Application field: | Fire resistance, smoke resistance |
| Finish | Brushed Stainless Steel |

Designation in accordance to standards EN 1935:2002

| | | | | | | | |
|---|---|---|---|---|---|---|---|
| 4 | 7 | 7 | 1 | 1 | 4 | **) | 14 |

CE

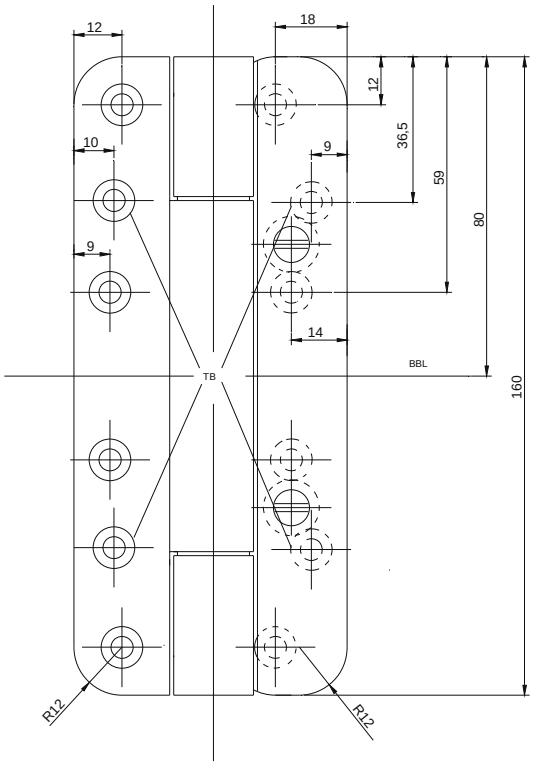


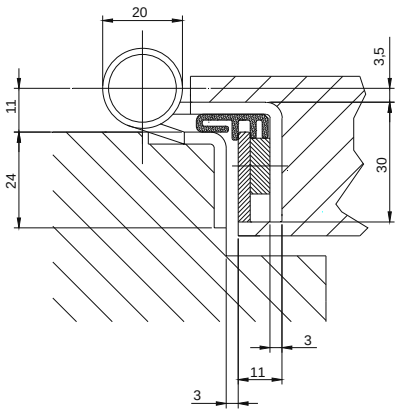

**H-Tec 120**
Hinge for rebated application on timber frame
order code **1585449**

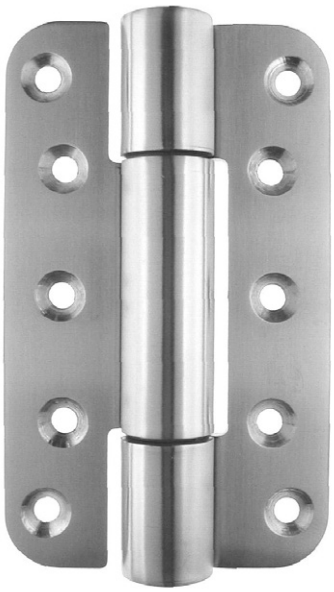

**Product description**
Flush fit application
To be screwn on timber frame
Anti-loosening threaded pin
With self lubricating bushes
Certification CE
Usable as DIN left or right element
On request available with security pin

**Technical details**

| | |
|---|---|
| Height: | 120 mm |
| Barrel diameter: | Ø20 mm |
| Material thickness: | 3 mm |
| Pin diameter: | Ø10 mm |
| Screws hole: | 5,0 x 50,0 mm |
| Load capacity*): | 120 kg with two hinges and door panel 2x1 m |
| Application field: | Fire resistance, smoke resistance |
| Finish | Brushed Stainless Steel |

Designation in accordance to standards EN 1935:2002

| | | | | | | | |
|---|---|---|---|---|---|---|---|
| 4 | 7 | 6 | 1 | 1 | 4 | **) | 13 |

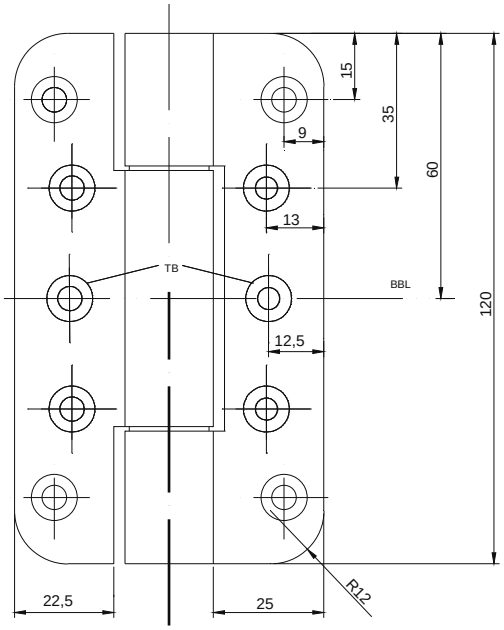


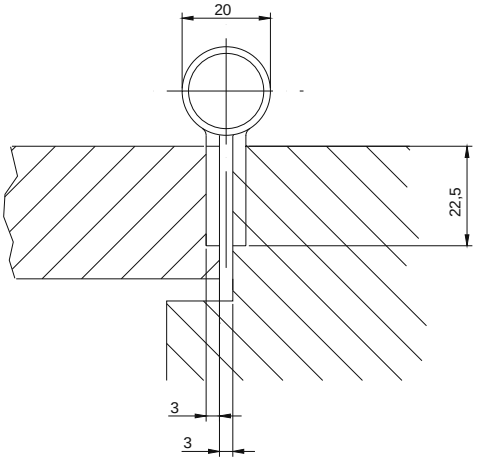

**H-Tec 160**
Hinge for rebated flush-fit application
on timber frame
order code **1585462**

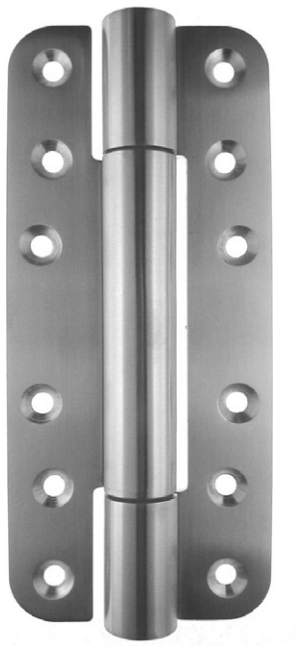

**Product description**
Flush fit application
To be screwn on timber frame
Anti-loosening threaded pin
With self lubricating bushes
Certification CE
Usable as DIN left or right element
On request available with security pin

**Technical details**

| | |
|---|---|
| Height: | 160 mm |
| Barrel diameter: | Ø20 mm |
| Material thickness: | 3 mm |
| Pin diameter: | Ø10 mm |
| Screws hole: | 5,0 x 50,0 mm |
| Load capacity*): | 160 kg with two hinges and door panel 2x1 m |
| Application field: | Fire resistance, smoke resistance |
| Finish | Brushed Stainless Steel |

Designation in accordance to standards EN 1935:2002

| | | | | | | | |
|---|---|---|---|---|---|---|---|
| 4 | 7 | 7 | 1 | 1 | 4 | **) | 14 |

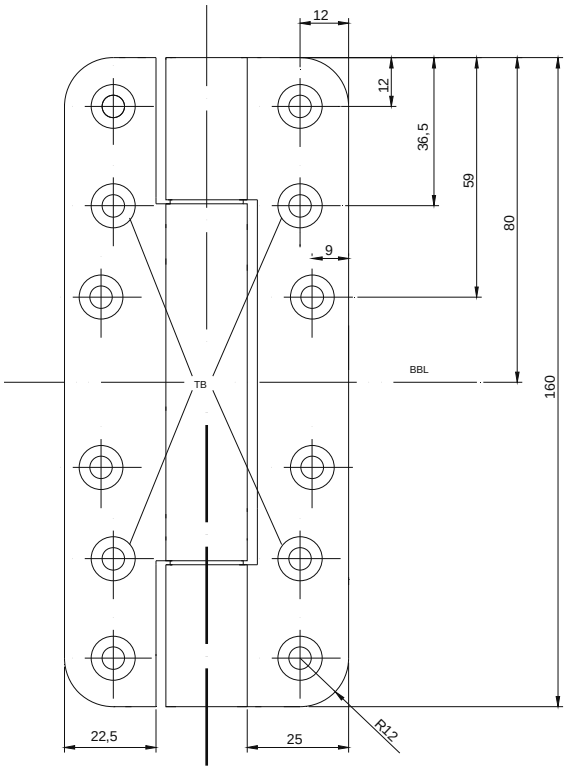


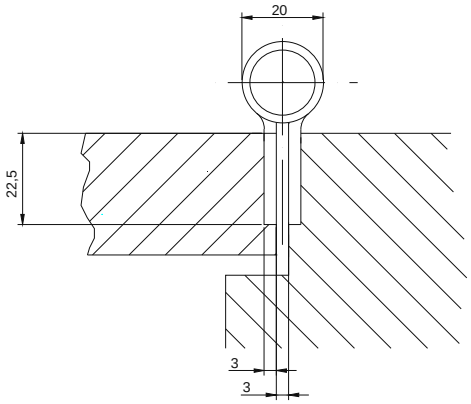

## Guide lines for chapter 3

| SFS code | Description | Frame | Door | H | kg | mm | page |
|---|---|---|---|---|---|---|---|
| 1589406 | H-Tec 3D 200 | Timber | flush-fit rebated | 180 | 200 | 3 | 32 |
| 1588253 | H-Tec 3D 200 | Timber | flush-fit rebated | 180 | 200 | 3 | 32 |
| 1585504 | H-Tec 3D 300 | Timber | flush-fit rebated | 180 | 300 | 4 | 33 |
| 1585505 | H-Tec 3D 400 | Timber | flush-fit rebated | 215,1 | 400 | 4 | 34 |
| 1585501 | H-Tec 3D 120 | Steel | flush-fit rebated | | 120 | | 35 |

**H-Tec 3D 200**
Support for flush-fit and rebated application on timber frame
order code **1588253 and 1589406**

**Product description**
Support for timber frame
For flush fit and rebated application
+/- 3mm adjustable in height, horizontal and gasket pressure
Plate into the support stable fixing system.
Easy to install (pre-assembled system
Usable as DIN left or right element
High stability thanks to the precise laying of the support into the frame

**Variants**
A cod. 1589406 rounded edge
B cod. 1588253 sharp edge

**Technical details**

| | |
|---|---|
| Screws (V2A): | 2 pieces 6,0 x 50,0 mm |
| Load capacity*): | **200 kg** with 2 hinges and door panel 2x1 m |

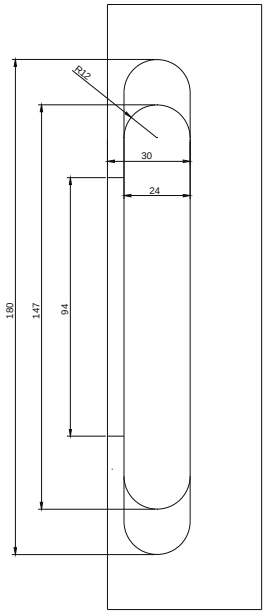


**A 1589406**

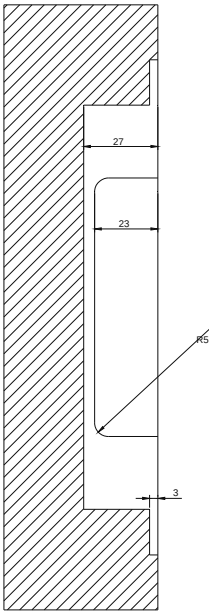


**B 1588253**

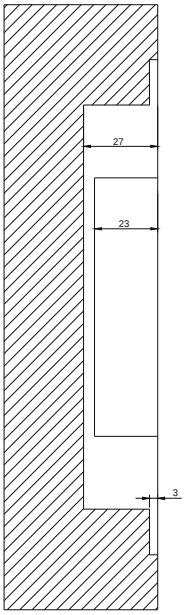

**H-Tec 3D 300**
Support for flush-fit and rebated application on timber frame
order code **1585504**

**Product description**
Support for timber frame
For rebated application and without cover frame
+/- 3mm adjustable in height, horizontal and gasket pressure
Plate into the support stable fixing system
Easy to install (pre-assembled system
Usable as DIN left or right element
High stability thanks to the precise laying of the support into the frame
Two special clamping screws eliminate the threading clearance
Fitting technique with high resistance

**Technical details**

| | |
|---|---|
| Screws (V2A): | 6 pieces 5,0 x 50,0 mm |
| Load capacity*): | **300 kg** with two hinges and door panel 2x1 m |

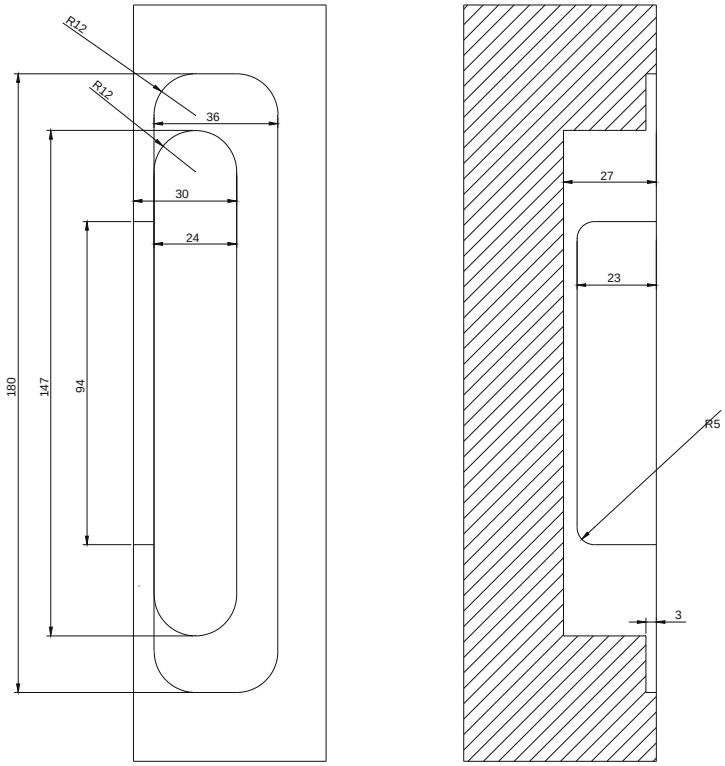

## H-Tec 3D 400

Support for flush-fit and rebated application on timber frame
order code **1585505**

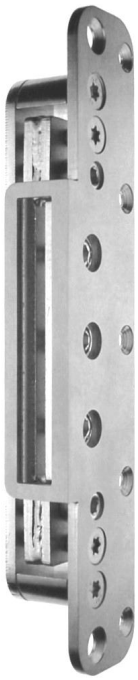

**Product description**

High strength resistance support for timber frame
For rebated application and without cover frame
+/- 3mm adjustable in height, horizontal and gasket pressure
Easy to install (pre-assembled system)
Strong plate fixing system into the support.
Usable as DIN left or right element
After adjustments two special clamping screws eliminate the threading clearance
High stability thanks to the precise laying of the support into the frame

**Technical details**

| | |
|---|---|
| Screws (V2A): | 5 pieces 5,0 x 60,0 mm |
| | 2 pieces 6,0 x 60,0 mm |
| Load capacity: | **400 kg** with two hinges and door panel 2x1 m |

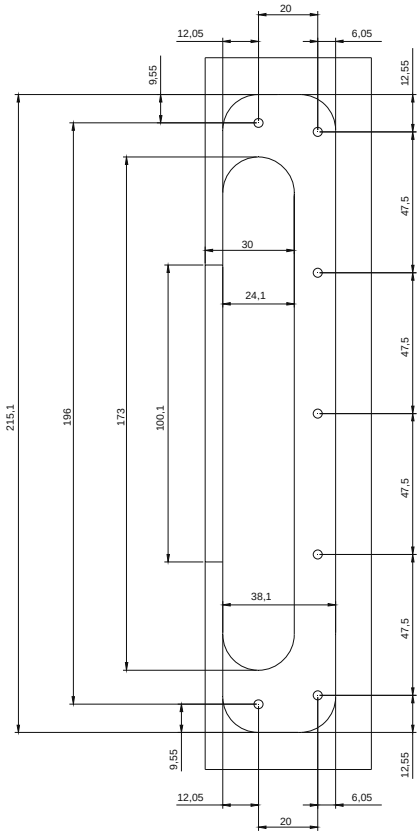


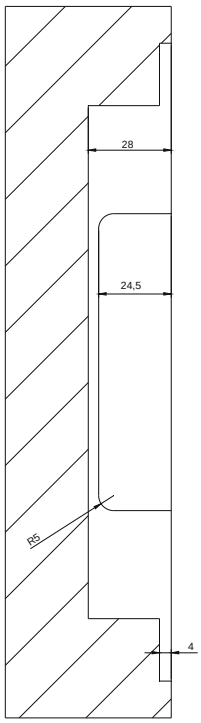

**H-Tec 3D 120**
Support for flush-fit and rebated application on steel frame
order code **1585501**

**Product description**
Support for steel frame
For flush fit and rebated applications
+/- 3mm adjustable in height, horizontal and gasket pressure
Usable as DIN left or right element
To be weld on the frame

**Technical details**

| | |
|---|---|
| Thickness: | Tailor made (as example 1,25 mm) |
| Load capacity: | 120 kg with two hinges and door panel 2x1 m |

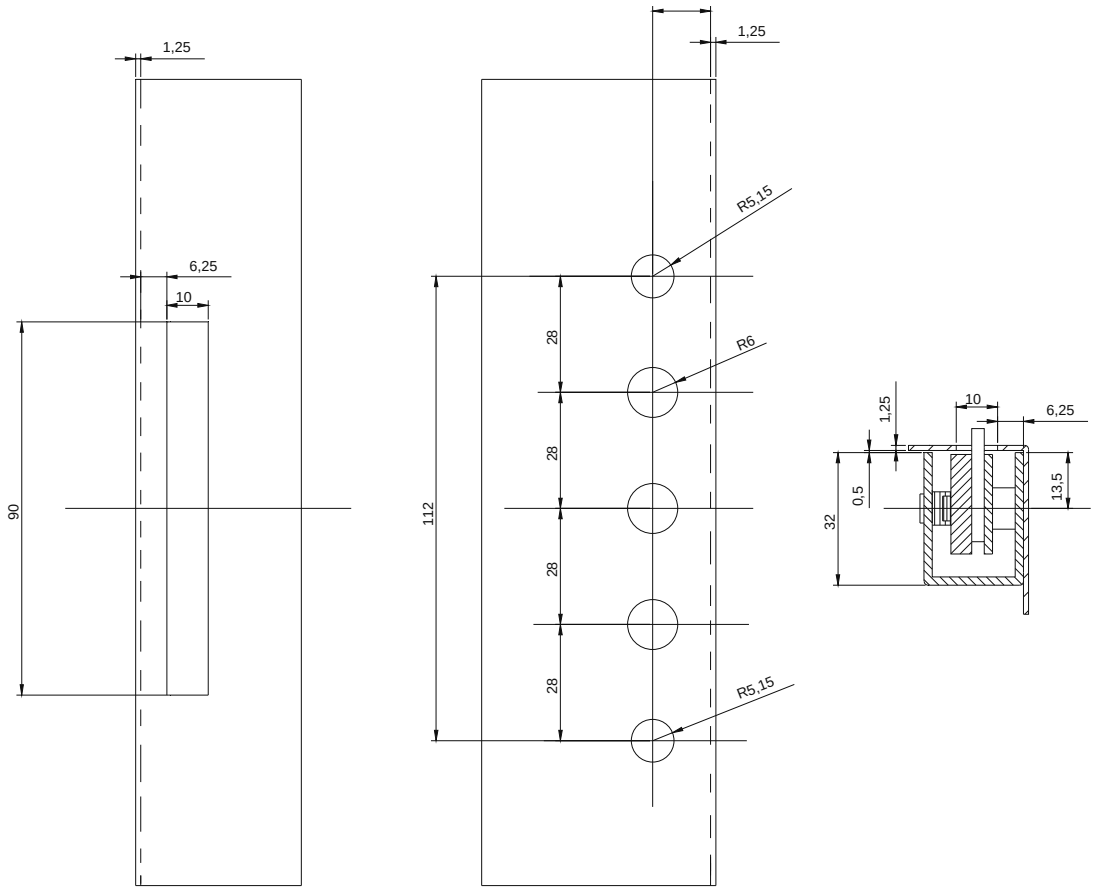

## Products and product highlights

In addition to hinges for residential property doors, we also manufacture door hinge systems for classic project doors consisting of door hinges as well as the receiving elements for wood and steel frames. Our door hinges are suitable for flush fit, rebated and rebated flush-mounted doors for the 3D systems as well as for screwing to a timber frame. Hinge height ranges from 100 mm to 120 mm up to 160 mm. Another specialty of our company is the development, design and implementation of customised, tailor-made products. Hinges for metal working and custom-made flat strike plates complete our product range

**H-Tec door hinges standard solutions**
In the H-Tec hinge range, our standard solutions have a load capacity of up to 200 kg. Our standard H-Tec door hinges have a 3-mm material thickness and a 020-mm roller diameter. Our H-Tec door hinges are equipped with a permanent hinge pin in the form of a double integrated pin lock. The hinges to be screwed on wooden frames, on the other hand, have a detachable, anti-twist screw pin. Our comprehensive range of H-Tec door hinges offers a suitable standard solution for a variety of applications

| H-Tec door hinges<br>...our comprehensive standard portfolio for high-end project , construction with a load capacity up to 200 kg | |
|---|---|
| • Material thickness 3 mm, roller diameter 020 mm, pin diameter 010 mm<br>• with a load capacity up to 200 kg*)<br>• complete product range<br>- Hinge height 100 mm, 120 mm and 160 mm<br>- 3D Systems as well as for screwing on wooden frames<br>- for flush fit, rebated applications with or without gasket<br>• concealed self lubricating bushes<br>• tested in accordance with DIN EN 1935:2002 (depending on type up to hinge class 14)<br>• CE certified and approved for use on fire and smoke control doors<br>• high corrosion resistance through the use of stainless steel<br>• usable as DIN left or right element | |
| **3D Systems up to 200 kg**<br>• Concealed integrated double pin lock (hinge not removable)<br><br>Chapter 1 | 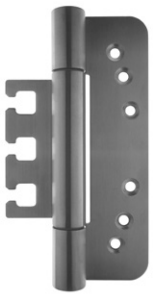 |
| **for screwing on timber frames**<br>• anti-twist screw pin (removable hinge)<br>• Optionally available with pin lock<br><br>Chapter 2 | |

## H-Tec supports

supports for frames
...the new generation with load capacity up to 200 kg

- Load capacity up to 200 kg
- For flush fit, rebated and cover frame applications
- 3D version: +/- 3mm adjustable in height, horizontal and gasket pressure
- Easy to install (pre-assembled system)
- Usable as DIN left or right element
- Strong plate fixing system into the support

cod. 1588253 rounded edge
cod. 1589406 sharp edge

–supports for steel frames
...reliable technique for load capacity up to 120 kg

**Supports for steel frame**

- Load capacity up to 120 kg
- 3D version: +/- 3mm adjustable in height, horizontal and gasket pressure
- Usable as DIN left or right element

cod. 15885501

**H-Tec 3D – Heavy duty solutions**
Due to increasingly larger and heavier doors, the load capacity of our standard H-Tec door hinges up to 200 kg is often no longer sufficient. If this is the case, we offer sophisticated, extremely well-engineered, field-tested heavy-duty door hinge systems consisting of hinges and precisely matched receiving elements for heavy-duty use with load capacities up to 400 kg.

**– Heavy-duty H-Tec door hinges**
**... for extreme requirements with a load capacity up to 400 kg**

- For Flush fit and rebated applications, and rebated applications with gasket)
- With a typical load capacity up to 300 kg
- Variants with an up to 400 kg load capacity available
- Sturdy design
  - 4 mm material, 022 mm roller diameter, hinge height 160 mm, pin 010 mm
  - Bracket sockets made of solid brass in the door part hinge roller
  - Heavy-duty specific hinge cranks
  - Standard frame part with welded hinge roller
  - Additional welding of door part hinge rollers for 400 kg variants
- Concealed heavy-duty mount ?? bushes
  - Large and free-moving
  - Maintenance- and almost wear-free
  - Impact and dirt resistant
  - Backlash-free bearing seat
- Anti-twist screw pin with double large pin lock
- High corrosion resistance through the use of stainless steel; rust proof
- Tested as per DIN EN 1935:2014 (hinge class 14) and EC certified
- Approved for use on fire and smoke control doors
- Can be used as DIN left and right element
- 400 kg variants with closed frame strap as tear-off protection (burglary-resistance measure)

**– Heavy-duty H-Tec door supports**
**... for extreme requirements with a load capacity up to 400 kg**

- For flush fit and rebated applications on timber
- 3D adjustment (height +/- 3 mm, side +/- 3 mm and gasket pressure +/- 3 mm)
- Mounting/receiver block completely pre-assembled (extremely easy installation)
- Can be used as DIN left and right element
- High-strength clamping mechanism for fixing the frame-side hinge strap in the receiving element
- Unique heavy-duty technique (after adjusting the threaded spindles, the threaded plate is braced against the cover bracket by means of special clamping screws)

| | |
|---|---|
| • essential construction<br>• with a load capacity up to 300 kg | • Extremely high tear-off resistance by fastening with seven screws in the frame<br>• Doubling of the thread plate in the area of the threaded spindles to 10 mm<br>• Heavy-duty technology with massive clamping screws<br>• With a load capacity up to 400 kg |
| 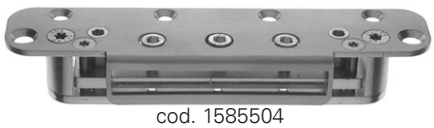 <br>cod. 1585504 | <br>cod. 1585505 |

## Hinge roller versions and pin lock

H-Tec door hinges are available in different roller versions.

### Door hinges with concealed anti-twist screw pin

These door hinges have a detachable anti-twist screw pin and concealed stud bolts. They are available with diameters 020 mm (material thickness 3 mm) and 022 mm (material thickness 4 mm). The bearing technology is concealed in the inner hinge barrel. For this type of door hinges, DIN left and DIN right elements can be used. Since the screw should always be on top without a tool holder, the hinge pin must be repositioned if necessary. To do so, loosen and remove the screw with the tool holder. The hinge pin can then be removed and inserted into the opposite end of the hinge barrel. In the process, care must be taken that the two outer hinge barrels and the inner one are aligned so as to avoid any the hinge pin jamming and thus damaging the door hinge. If necessary, these types of hinges can be equipped with one or two additional pin locks to prevent unauthorised loosening of the hinge pin. In this type of pin lock, the hinge pin is secured by a small threaded pin which is screwed horizontally through the barrel in a circular groove of the hinge pin. This threaded pin cannot be accessed when the door is closed. If pin locks are provided for on an ex works basis, it is not necessary to change the hinge pin from DIN left to DIN right. This type of door hinges also includes our heavy-duty hinges with a 400 kg load capacity.

### Hinges with double integrated pin lock

These H-Tec door hinges have a non-detachable hinge pin and are available with a roller diameter of Ø 20 mm (material thickness 3 mm) as standard. They can therefore be used without repositioning the DIN LS and DIN RS hinge pins. An additional pin lock is not required as these hinges already have permanent pin locks in the outer hinge rollers. The bearing technology is concealed in the inner hinge roller and ensures high load capacities up to 200 kg.

## Surface finishes

H-Tec door hinge systems can be supplied in many surface finishes, depending on the style of the doors, and perfectly matching the design of other fittings.

### Standard versions

- Brushed stainless steel

### Special versions

- Mirror polished stainless steel
- Matt stainless steel, brass colours, PVD coated (matt or mirror polished)

Further surface finishes are available on request.

### Corrosion protection

If our products are used in damp rooms or exposed to the weather, only stainless steel door hinges should be used. In extreme areas such as coastal regions, premises with aggressive air, such as indoor swimming pools and acidic environments, there may be difficulties with the standard materials used by us. In these cases, a custom-made special material should then be ordered after consulting our technical department.

## Door hinge system installation and loading capacity

To ensure the perfect operation and longevity of our hinges, there are a few points to consider, which are covered in this section. The basis for the following remarks is the figure below. A necessary precondition thereto is that the door hinges are professionally mounted on the door and frame.

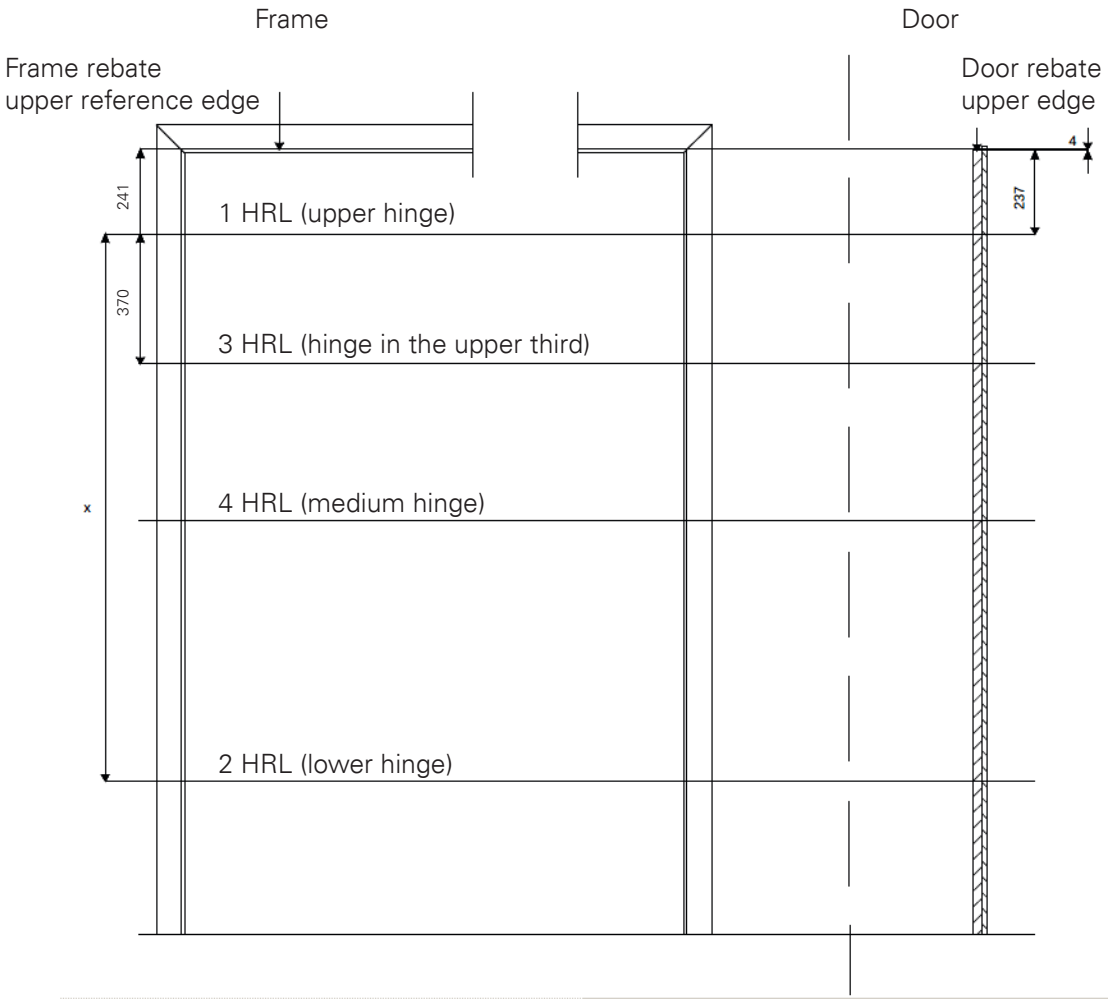


Figure: Hinge reference line (HRL) arrangement

**Hinge arrangement on door/frame**
The position of the hinges on the door/frame is defined by the hinge reference line. In accordance with DIN 18268, the hinge reference line (HRL) is understood as an imaginary line in a door hinge, whose distance from the upper reference edge of the frame rebate determines the door hinge height.

The hinge reference line depends on the type of door hinge used. For single hinge reference lines, please refer to our product information.

The point at which door hinges should be mounted on a door/frame, depends on the door leaf height, where the hinge reference line (upper hinge) should always be 241 mm below the upper reference edge of the frame rebate, or 237 mm below the top edge of the door rebate. The distance between the 1st hinge reference line (upper hinge) and the 2nd hinge reference line (lower hinge) depends on the door leaf height and can be found in the table below.

If a third hinge is to be used and mounted in the door upper third, the distance between the 1st hinge reference line (upper hinge) and the 3rd hinge reference line (hinge in the upper third) should be 370 mm. On the other hand, if a third hinge (or even a 4th one) is to be mounted in the middle of the door, the 4th hinge reference line (medium hinge) should ideally lie exactly halfway up the door leaf. In addition, a fifth hinge can be placed in the lower third of the door

| Door height | Distance from frame rebate upper reference edge to 1st HRL | Distance between 1st HRL and 2nd HRL (measure X) | Distance between 1st HRL and 3rd HRL | Position of 4th HRL |
|---|---|---|---|---|
| from 1860 mm<br>to 2110 mm | 241 mm (+1 mm) | 1435 mm<br>(+/- 0,5 mm) | 370 mm | half door height |
| from 2111 mm<br>to 2235 mm | 241 mm (+1 mm) | 1560 mm<br>(+/- 0,5 mm) | 370 mm | half door height |
| from 2236 mm<br>to 2360 mm | 241 mm (+1 mm) | 1685 mm<br>(+/- 0,5 mm) | 370 mm | half door height |

Table: Mounting dimensions

**Load capacity**

The maximum load capacities specified are based on the following principles:
Door size (height x width x thickness): 2mx1 m x 40 mm
Number of hinges per door: 2
Distance between both hinges: 1435 mm
No need to use door closers and stoppers.
For more information about the load capacity subject, please also refer to section 5.

**Extra-wide doors**

If extra-wide doors (door width> 1 m) are used, the maximum load capacity is reduced, as per section 4.2, in such a way that the 1 m standard door width is exceeded. The maximum load capacity determined in this way must be greater than the door weight (with respect to this, see also section 4.8.).

Hence, the following relationship applies:

max. Extra-wide door load capacity [kg]
=
max. 1 m wide door load capacity [kg] x (1 – extra-wide door)
≥
Door weight [kg]
where:
Door overwidth = (actual door width [m] -1 m) / 1m

If, for example, H-Tec stainless steel door hinges VI/ZS/120/38/UE are fitted on 2 m high, 1.20 m wide and 65 kg heavy doors, the following maximum load capacity (according to product information, the maximum load capacity, if a door of 2 m x 1 m and two hinges are used, is 120 kg (=maximum load capacity as per section 4.2.)) will result.
*Door overwidth = (1.20 m - 1 m) / 1m = 0.2*
*max. load capacity Extra-wide door = 120 kg x (1-0.2) = 96 kg≥ 65 kg*

As when using an extra-wide door (96 kg) the door weight (65 kg) is lower than the maximum load capacity, this door hinge is suitable for the described application. The versions referred to in section 4.8 must be strictly observed.

**Third / fourth hinge**

IThe use of a third hinge can, depending on the specific hinge type, increase the maximum load capacity as per section ) by up to 30%, provided that the hinge reference line (HRL) of this third hinge (3rd HRL; hinge in the upper third) lies 370 mm below the hinge reference line of the upper hinge (1st hinge reference line). If the third hinge is fitted halfway up the door (4th hinge reference line; medium hinge), the maximum load capacity, as per section 4.2.), will not basically increase. A third hinge arranged this way will only contribute to better radial guidance of the door. It also follows that fitting a fourth hinge halfway up the door leaf (4th HRL; medium hinge) will no longer have a positive impact on the increase in the maximum load capacity possibly caused by the use of a third hinge in the upper third (3rd HRL, 370 mm below 1st HRL), as described in section 4.2.). Also, fitting a fifth hinge in the lower third of the door will not affect the maximum load capacity.

### Welded hinge rollers

In order to prevent hinge rollers from being wound up, they should be welded in sections in the area of the hinge roller slots or over their entire length. This measure is usually recommended if the doors are extremely heavily loaded or if hinges are to be installed on burglary-resistant doors.

### Use of door closers

When door closers or stoppers are used, the maximum load capacity that can be achieved when using a 2mx1 m door and two hinges, is reduced. Depending on the door closer used, the maximum load capacity is usually reduced, as per section 4.2.), by 20% to 50%. In this case, of course, the door closer must be professionally mounted and adjusted.

In addition, when using a door closer, the upper hinge is subject to a very large outward bending moment. When using door closers, we therefore recommend using at least three hinges (third hinge in the upper third of the door (3rd HRL, 370 mm below the 1st HRL of the upper hinge), possible fourth hinge halfway up the door (4th HRL, medium hinge)).

Furthermore, make sure that hinges are properly and durably fastened to the door and frame. When using substructures/receiving elements in the frame, it must be ensured that the substructures/receiving elements used are suitable for use in conjunction with door closers. In addition, make sure that substructures/receiving elements are mounted firmly enough on the frame.

If a door closer is used, a third hinge in the upper third (3rd HRL, 370 mm below 1st HRL) does not usually lead to an increase in the maximum load capacity as per section 4.2.).

Furthermore, when using door closers, we recommend welding hinge rollers as per section 4.5.

### Carrying bolts

H-Tec door hinges can be used with carrying bolts for stabilisation purposes. Should a door be heavily loaded, we recommend using 12x40 mm (frame) and 12x60 mm (door) carrying bolts. Carrying bolts only increase stability, not the maximum load capacity.

### Overview of the factors influencing the load capacity of door hinges

The following factors can significantly reduce the maximum load capacity of door hinges as per Section 4.2.) or cause the actual load on the hinges to be several times higher than the door weight:

- Place of installation (e.g. residential buildings, public buildings such as hospitals, schools, etc.)
- Material type(s) of door, frame, hinges, substructures/receiving elements and fasteners
- Door size (e.g. extra-wide doors)
- Arrangement of door hinges
- Incorrect installation of hinges and/or receiving elements (e.g. uneven spindle adjustment in the receiving element, see section 6)
- Opening direction of the door
- Door closers, door stoppers, door buffers
- Wind loads
- etc.

When selecting door hinges, a sufficient reserve should always be considered (for example by using a third hinge). Of course, it should always be ensured that our door hinges and receiving elements are professionally mounted on the door and frame (see section 6).

## Certificates

Over the decades, door hinge systems have proven their worth in a large number of large-scale projects in which particularly high demands are placed on these systems. That is why customer satisfaction is our top priority. We attach great importance to product, process and logistics high quality.

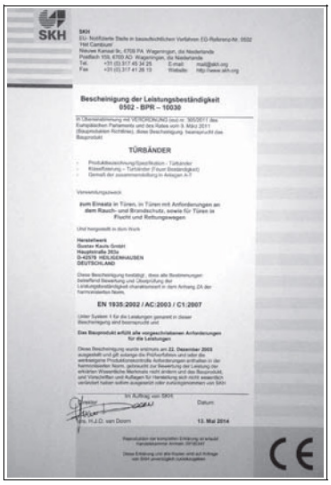


To ensure our high quality standards in-house, manufacturing processes are performed on one hand via CNC-controlled processing machines, and, on the other hand, however, still manually by highly qualified specialists. The resulting careful processing, paired with a streamlined business organisation and continuous production controls in accordance with DIN EN 1935:2002, can thus ensure the high quality level which we have set ourselves as a target. Since 2005, we have been certified as performance testers (until 2013: EC Certificate of Conformity), which entitles us to bear the CE marking and includes regular external monitoring and auditing of our QA system by the SKH (Stichting Keuring Hout Netherlands, a notified body in building control procedures).

H-Tec door hinges are suitable for use on doors with requirements for smoke and fire protection as well as in escape and rescue routes, in accordance with our certificate of performance testing 0502 - BPR - 10030.

In accordance with DIN EN 1935: 2002, a classification key shall include the following details:

| Digit position | Aspect | Possible classes | Classes (relevant for GUSTAV KAULS®) | Meaning |
|---|---|---|---|---|
| 1 | Use class | 1-4 | 2 | Medium use |
| | | | 3 | Heavy use |
| | | | 4 | Extremely heavy use |
| 2 | Test cycles during continuous operation | 3-4, 7 | 7 | 2000.000 (door hinges) |
| 3 | Test door mass | 0-7 | 2 | 40 kg |
| | | | 4 | 80 kg |
| | | | 5 | 100 kg |
| | | | 6 | 120 kg |
| | | | 7 | 160 kg |
| 4 | Fire resistance | 0,1 | 0 | Not suitable for use on fire/ smoke protection doors |
| | | | 1 | All hinges meet the basic requirements for safe use. |
| 5 | Use safety | 1 | 1 | All hinges meet the basic requirements for safe use. |
| 6 | Corrosion resistance | 0-5 | 4 | Very high corrosion resistance |
| 7 | Protection | 0,1 | 0 | Not suitable for use on burglary-resistant doors |
| | | | 1 | Suitable for use on burglary-resistant doors |
| 8 | Hinge class | 0-14 | 7, 11, 12, 13, 14 | Summary of digit positions 1,2 and 3 |

Hinge class 14 currently represents the highest hinge class. This hinge class relates to a test door mass, i.e. a load capacity of 160 kg. Many of our hinges are certified in this highest hinge class 14. This is why these hinges often feature significantly higher load capacities up to 400 kg. These higher load capacities, which we have proven in our own tests, are provided for the corresponding hinge types in our product information, where we do not just specify the maximum 160 kg "standard load capacity."
For hinge specific classification codes, please refer to the product information

## For timber frame (up to 200 kg)

## H-Tec 3D supports cod. 1588253 and cod. 1589406

**(1)** Make a cutout in the block frame according to the separate routing drawing and pre-drill holes for fixing screws.
**(2)** Insert the receiving element into the frame-side cutout and firmly screw with two fixing screws 6x60 mm (B) with drill bit.
**(3)** Insert H-Tec hinge strap into the corresponding receiving slot (between the threaded and clamping plates).
**(4)** Align the door in height and closing pressure and then firmly tighten clamping screws(C).
**(5)** Align the door width with adjusting spindles (D). In so doing, it should be noted that: Spindles (D) must be adjusted evenly!

• If the door is to be readjusted in height or closing pressure, loosen clamping screws (C), align the height or closing pressure of the door accordingly, and then re-tighten clamping screws (C).

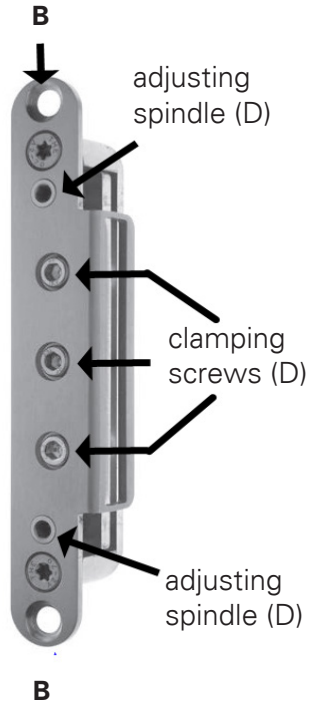


## For timber frame (up to 300 kg)
## H-Tec 3D support cod. 1585504

**(1)** Make a cutout in the block frame according to the separate routing drawing and pre-drill holes for fixing screws.
**(2)** Insert the receiving element into the frame-side cutout and firmly screw with (see picture):
two fixing screws 6x60 mm (A) with drill bit
four fixing screws 5x60 mm (B) with drill bit
**(3)** Insert H-Tec hinge strap into the corresponding receiving slot (between the threaded and clamping plates). For hinge straps with closed receiving areas, the corresponding clamping screws (C) must first be completely removed.
**(4)** Align the door in height and closing pressure and then firmly tighten clamping screws(C).
**(5)** Unscrew each clamping screw (D) so that there is a clear distance between the outer surface of the screw head and the outer surface of the cover plate
**(6)** Align the door width with adjusting spindles (E). In so doing, it should be noted that:
a)Spindles (E) must be adjusted evenly!
b)The heads of clamping screws (D) must always be located outside the cover plate of the cover bracket!.
**(7)** Firmly tighten clamping screws (D).

• If the door is to be readjusted in height or closing pressure, loosen clamping screws (C), align the height or closing pressure of the door accordingly, and then re-tighten clamping screws (C).
• If the door width is to be readjusted, repeat steps (5) to (7).

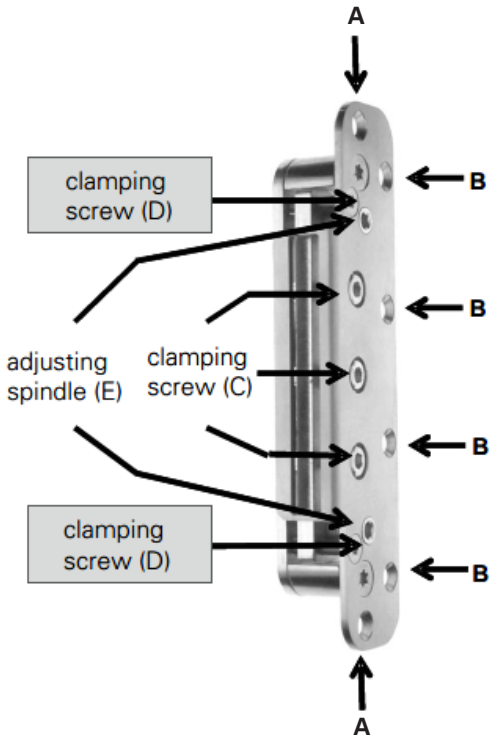

## For timber frame (up to 400 kg)
## H-Tec 3D support cod.1585505

**(1)** Make a cutout in the block frame according to the separate routing drawing and pre-drill holes for fixing screws (sufficiently large and deep).
**(2)** Insert the receiving element into the frame-side cutout and firmly screw with (see picture):
two fixing screws 6x60 mm (A) with drill bit
five fixing screws 5x60 mm (B) with drill bit)
**(3)** Insert hinge strap into the corresponding receiving slot (between the threaded and clamping plates). For hinge straps with closed receiving areas, the corresponding clamping screws (C) must first be completely removed.
**(4)** Align the door height and width and then firmly tighten clamping screws (C)).
**(5)** Unscrew each clamping screw (D) by 7 turns so that there are 7 mm between the outer surface of the screw head and the outer surface of the cover plate.
**(7)** Firmly tighten clamping screws (D)

- If the door is to be readjusted in height or closing pressure, loosen clamping screws (C), align the height or closing pressure of the door accordingly, and then re-tighten clamping screws (C).
- If the door width is to be readjusted, repeat steps (5) to (7).

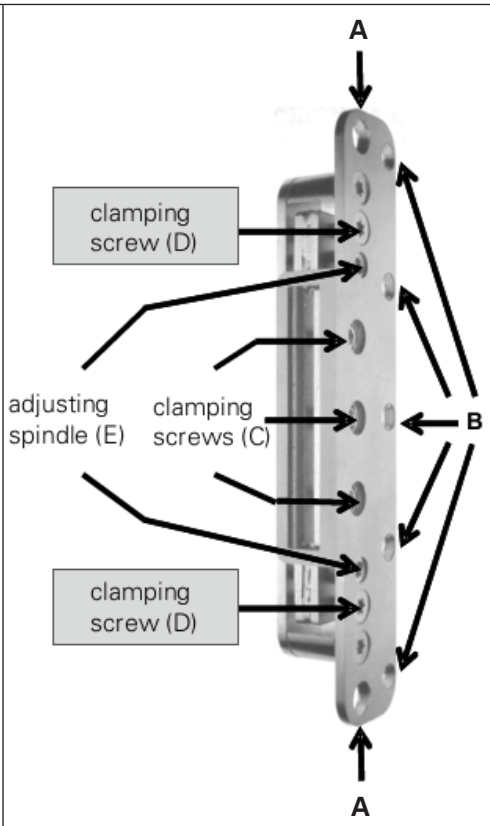


## For steel frame (up to 120 kg)
## H-Tec support cod. 1585501

**(1)** In accordance with the separate routing drawing, perform cutouts, bores and, if necessary, counterbores in the steel frame and pre-drill holes for fixing the screws

**(2)** Insert and fasten receiving element to the corresponding points in the frame by welding.

**(3)** Insert frame hinge straps into the corresponding receiving slot (between the threaded and clamping plates)

**(4)** Align the door in height and closing pressure and then firmly tighten clamping screws (B).

**(5)** Align the door width with adjusting spindles (C). In so doing, it should be noted that:
Spindles (C) must be adjusted evenly!

- If the door is to be readjusted in height or closing pressure, loosen clamping screws (B), align the height or closing pressure of the door accordingly, and then re-tighten clamping screws (B)

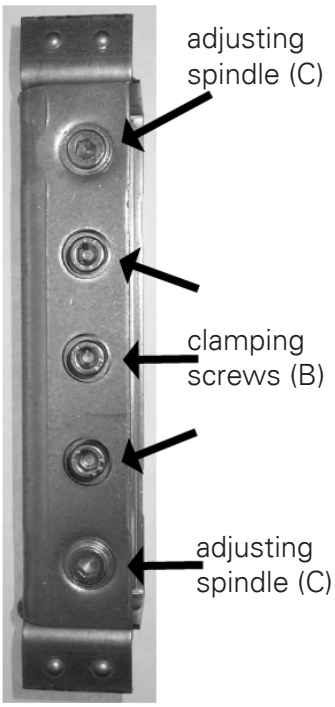

SFS intec S.r.l.

Via Castelfranco Veneto, 71
IT-33170 Pordenone

T. +39 0434 995 11
F. +39 0434 995 201
it.info@sfsintec.biz
www.sfsintec.biz/it

© SFS intec 2018 / Stampato in Italia / Per eventuali errori di stampa non ci assumiamo nessuna responsabilità - 900 045 i_MO_IT_C